Vanta Family
X-Ray Fluorescence Analyzer

User's Manual

Models:
Vanta Max Series
Vanta Core Series

10-040355-01EN — Rev. 2
December 2023

This instruction manual contains essential information on how to use this Evident product safely and effectively. Before using this product, thoroughly review this instruction manual. Use the product as instructed.

Keep this instruction manual in a safe, accessible location.

EVIDENT SCIENTIFIC, INC., 48 Woerd Avenue, Waltham, MA 02453, USA

Copyright © 2023 by Evident. All rights reserved. No part of this publication may be reproduced, translated, or distributed without the express written permission of Evident.

This document was prepared with particular attention to usage to ensure the accuracy of the information contained therein, and corresponds to the version of the product manufactured prior to the date appearing on the title page. There could, however, be some differences between the manual and the product if the product was modified thereafter.

The information contained in this document is subject to change without notice.

Part number: 10-040355-01EN
Rev. 2
December 2023

Printed in the United States of America

The Bluetooth® word mark and logos are registered trademarks owned by Bluetooth SIG, Inc. and any use of such marks by Evident Scientific, Inc. is under license.

The microSD Logo is a trademark of SD-3C, LLC.

All brands are trademarks or registered trademarks of their respective owners and third party entities.

Table of Contents

List of Abbreviations **7**

Important Information — Please Read Before Use **9**

Intended Use 9
Instruction Manual 9
Instrument Compatibility 10
Repair and Modification 10
Safety Symbols 11
Safety Signal Words 12
Note Signal Words 12
Safety 13
Warnings 13
Battery Precautions 15
Equipment Disposal 16
BC (Battery Charger - California, USA Community) 16
CE (European Conformity) 16
UKCA (United Kingdom) 16
WEEE Directive 17
China RoHS 17
Korea Communications Commission (KCC) 18
KC (South Korea Community) 18
EMC Directive Compliance 18
FCC (USA) Compliance 19
ICES-001 (Canada) Compliance 20
Code de la santé publique (France) 20
Packing and Return Shipping 20
Regulations for Shipping Products with Lithium-Ion Batteries 21
Open Source Software 21
Warranty Information 22
Technical Support 23

Introduction **25**
Main Applications 25
Analyzer Models and Methods 25
Analyzer Features 26

1. Safety Information **29**
1.1 Radiation Safety Information 29
1.2 Radiation Safety Program 30
1.3 X-Ray Safety 30
1.4 Safety Features 31
1.5 General Precautions 33
1.6 Service Considerations 33
1.7 Electrical Precautions 34
1.8 Cables and Cords 34
1.9 Indicators and Statuses 35
1.9.1 Power Indicator 35
1.9.2 X-Ray Indicator 36
1.9.3 Test Screen 37
1.10 Safety Guidelines 38
1.11 Safety Administration 39
1.11.1 Radiation Safety Training Recommendations 39
1.11.2 Dosimeters 41
1.11.3 Dosimeter Safety Program 42
1.11.4 Dosimeter Suppliers 43
1.11.5 Registration Requirements 44

2. Package Contents **47**
2.1 Unpacking the Vanta XRF Analyzer 47
2.2 Case Contents 47
2.3 Vanta Analyzer Components 48
2.4 Standard Accessories 49
2.5 Standard Accessories 50
2.5.1 AC Power Adaptor 51
2.5.2 Power Cords 52
2.5.3 Batteries 53
2.5.4 microSD Card 53
2.5.5 USB Drive 53
2.5.6 USB Data Cable 54
2.5.7 Measurement Window Films 54
2.6 Optional Accessories 54

3. Operation 57
3.1 Data Port 57
3.1.1 AC Power Adaptor Connector 59
3.1.2 Mini USB Connector 61
3.1.3 microSD Slot 61
3.1.4 USB A Connectors 62
3.2 Controls 63
3.2.1 Power Button 64
3.2.2 Back Button 64
3.2.3 Trigger 64
3.3 Indicators 65
3.4 Vanta Batteries 65
3.4.1 Checking the Battery Charge Status 65
3.4.2 Charging the XRF Analyzer Battery Using the AC Power Adaptor 65
3.4.3 Replacing the XRF Analyzer Battery 65
3.4.4 Hot Swapping the Battery 67
3.5 Test Procedures 68
3.5.1 Powering On the XRF Analyzer 68
3.5.2 Powering Off the XRF Analyzer under Normal Conditions 70
3.5.3 Powering Off the XRF Analyzer under Emergency Conditions 71
3.5.4 Aiming the XRF Analyzer at Large Targets 72
3.5.5 Aiming the XRF Analyzer at Small Targets 73
3.5.6 Starting a Test 73
3.6 Testing Best Practices 77
3.7 Alloy Analysis Method Overview 77
3.7.1 Match Number Concept 78
3.7.2 Match Possibilities 78
3.7.3 Scrap and Recycling Features 78
3.7.3.1 Grade Match Messaging (GMM) 79
3.7.3.2 SmartSort 79
3.7.3.3 Nominal Chemistry 79
3.7.3.4 Residuals Settings 79
3.7.4 Test Sample Considerations 80
3.8 GeoChem Method Overview 82
3.8.1 Check Standards 82
3.8.2 Sample Presentation 82
3.8.3 User Factors 83
3.9 Air Density Correction 84
3.10 Car Catalyst Method Overview 84
3.11 ROHS Method Overview 84
3.11.1 Automatic Test Sequence 86
3.11.2 Sample Presentation 86

3.11.3 IEC Quantitative Screening Requirements 86

4. Maintenance and Troubleshooting 89
4.1 Measurement Window Replacement 89
4.1.1 Replacing the Vanta Window 91
4.2 Internal Fan Installation 93
4.3 Troubleshooting 96

Appendix A: Specifications 99

Appendix B: Vanta Work Station 103
B.1 Package Content 103
B.2 Accessories 105
B.3 Safety Information 105
B.3.1 Radiation Safety 106
B.3.2 AC Power Adaptors 106
B.3.3 Safety Interlocks 107
B.3.4 X-Ray Indicator 107
B.3.5 Shutdown Under Emergency Conditions 108
B.4 Physical Planning 109
B.4.1 Physical Dimensions 109
B.4.2 Work Station Chamber Dimensions 110
B.4.3 Electrical Requirements 112
B.5 Assembling the Work Station 112
B.6 Connecting a Computer or Mobile Device to the Vanta 119
B.7 Operating the Vanta Analyzer When It Is Coupled to the Work Station 119
B.8 Disassembling the Work Station 120

Appendix C: X-Ray Fluorescence Spectrometry Overview 125

Appendix D: Alloy Grade Libraries 127
D.1 Residuals Settings 127
D.2 Factory Grade Library: Max Series and Core Series 129

List of Figures 135

List of Tables 137

List of Abbreviations

ACEA	Advisory Committee on Environmental Aspects
ALARA	as low as reasonably achievable
EDXRF	energy dispersive X-ray fluorescence
EFUP	environment-friendly use period
IEC	International Electrotechnical Commission
TLD	thermoluminescent dosimeter
XRF	X-ray fluorescence

Important Information — Please Read Before Use

Intended Use

The Vanta X-ray fluorescence (XRF) analyzer is designed to perform identification and analysis of elements contained within test samples, from magnesium to uranium (Mg to U), depending on the selected model, contained within test samples.

WARNING

Do not use the Vanta analyzer for any purpose other than its intended use. It must never be used to inspect or examine human or animal body parts.

Instruction Manual

This instruction manual contains essential information on how to use this product safely and effectively. Before using this product, thoroughly review this instruction manual. Use the product as instructed.

Keep this instruction manual in a safe, accessible location.

IMPORTANT

Some of the details of components illustrated in this manual may differ from the components installed on your instrument. However, the operating principles remain the same.

Instrument Compatibility

The Vanta analyzer is primarily a self-contained unit. However, it does have a series of I/O ports that can be used to connect compatible peripherals and connect it to a PC. The unit derives its required DC input power from the Vanta AC adaptor or battery pack.

CAUTION

Always use equipment and accessories that meet Evident specifications. Using incompatible equipment could cause equipment malfunction and/or damage, or human injury.

Repair and Modification

The Vanta analyzer contains two user-serviceable parts: the measurement window and the optional internal fan. If the measurement window is damaged, the window assembly should be replaced as soon as possible. For more details, see “Measurement Window Replacement” on page 89. For internal fan installation instructions, see “To install the internal fan” on page 93.

CAUTION

To prevent human injury and/or equipment damage, do not open the instrument housing or modify the Vanta analyzer.

Safety Symbols

The following safety symbols might appear on the instrument and in the instruction manual:

General warning symbol

This symbol is used to alert the user to potential hazards. All safety messages that follow this symbol shall be obeyed to avoid possible harm or material damage.

Radiation warning symbol (International)

Radiation warning symbol (Canada)

Radiation warning symbol (China)

These symbols are used to alert the user to the presence of potentially harmful ionizing radiation generated within the XRF or XRD analyzer. All safety messages that follow these symbols shall be obeyed to avoid possible harm.

Shock hazard caution symbol

This symbol is used to alert the user to potential electric shock hazards. All safety messages that follow this symbol shall be obeyed to avoid possible harm.

Safety Signal Words

The following safety signal words might appear in the documentation of the instrument:

DANGER

The DANGER signal word indicates an imminently hazardous situation. It calls attention to a procedure, practice, or the like that if not correctly performed or adhered to will result in death or serious personal injury. Do not proceed beyond a DANGER signal word until the indicated conditions are fully understood and met.

WARNING

The WARNING signal word indicates a potentially hazardous situation. It calls attention to a procedure, practice, or the like that if not correctly performed or adhered to could result in death or serious personal injury. Do not proceed beyond a WARNING signal word until the indicated conditions are fully understood and met.

CAUTION

The CAUTION signal word indicates a potentially hazardous situation. It calls attention to a procedure, practice, or the like that if not correctly performed or adhered to may result in minor or moderate personal injury, material damage, particularly to the product, destruction of part or all of the product, or loss of data. Do not proceed beyond a CAUTION signal word until the indicated conditions are fully understood and met.

Note Signal Words

The following note signal words could appear in the documentation of the instrument:

IMPORTANT

The IMPORTANT signal word calls attention to a note that provides information that is important or essential to the completion of a task.

NOTE

The NOTE signal word calls attention to an operating procedure, practice, or the like, that requires special attention. A note also denotes related parenthetical information that is useful, but not imperative.

TIP

The TIP signal word calls attention to a type of note that helps you apply the techniques and procedures described in the manual to your specific needs, or that provides hints on how to effectively use the capabilities of the product.

Safety

Before turning on the instrument, verify that the correct safety precautions have been taken (see the following warnings). In addition, note the external markings on the instrument, which are described under “Safety Symbols.”

Warnings

WARNING

General Warnings

- Carefully read the instructions contained in this instruction manual prior to turning on the instrument.
- Keep this instruction manual in a safe place for further reference.
- Follow the installation and operation procedures.
- It is imperative to respect the safety warnings on the instrument and in this instruction manual.
- If the equipment is used in a manner not specified by the manufacturer, the protection provided by the equipment could be impaired.
- Do not install substitute parts or perform any unauthorized modification to the instrument.
- Service instructions, when applicable, are for trained service personnel. To avoid the risk of electric shock, do not perform any work on the instrument unless

qualified to do so. For any problem or question regarding this instrument, contact Evident or an authorized Evident representative.

- Do not allow metallic or foreign objects to enter the device through connectors or any other openings. Otherwise, a malfunction or electric shock may result.

Radiation Safety Warning

Do not open the system, disassemble, or modify any internal components. These actions could result in serious damage to the system and a health hazard to the operator.

Electrical Warnings

CAUTION

If an unauthorized power supply cord is used to power the instrument or charge the batteries, Evident cannot guarantee the electrical safety of the equipment.

CAUTION

- Tubes and some detectors in this instrument contain beryllium metal. In its as-supplied state, the beryllium poses no harm to the user. However, if a detector or tube is damaged, contact with small particles is possible if the instrument is breached (for example, a window is broken or during window replacement). Intact skin is sufficient protection against this situation and washing with soap and water will effectively remove any beryllium contamination. If granulated beryllium embeds in an open wound, seek medical attention.
- Instruments with a damaged detector or tube must be returned to your local distributor or the manufacturer. Care should be taken to limit the release of beryllium from the instrument.

Battery Precautions

CAUTION

- Before disposing of a battery, check your local laws, rules, and regulations, and follow them accordingly.
- Transportation of lithium-ion batteries is regulated by the United Nations under the United Nations Recommendations on the Transport of Dangerous Goods. It is expected that governments, intergovernmental organizations, and other international organizations shall conform to the principles laid down in these regulations, thus contributing to worldwide harmonization in this field. These international organizations include the International Civil Aviation organization (ICAO), the International Air Transport Association (IATA), the International Maritime Organization (IMO), the US Department of Transportation (USDOT), Transport Canada (TC), and others. Please contact the transporter and confirm current regulations before transportation of lithium-ion batteries.
- For California (USA) only:

  The CR battery contains perchlorate material, and special handling may be required. Refer to http://www.dtsc.ca.gov/hazardouswaste/perchlorate.
- Do not open, crush, or perforate batteries; doing so could cause injury.
- Do not incinerate batteries. Keep batteries away from fire and other sources of extreme heat. Exposing batteries to extreme heat (over 80 °C) could result in an explosion or personal injury.
- Do not drop, hit, or otherwise abuse a battery, as doing so could expose the cell contents, which are corrosive and explosive.
- Do not short-circuit the battery terminals. A short circuit could cause injury and severe damage to a battery making it unusable.
- Do not expose a battery to moisture or rain; doing so could cause an electric shock.
- Only use the Vanta unit or an external charger approved by Evident to charge the batteries.
- Only use batteries supplied by Evident.
- Do not store batteries that have less than 40% remaining charge. Recharge batteries to between 40% and 80% capacity before storing them.
- During storage, keep the battery charge between 40% and 80%.
- Do not leave batteries in the Vanta unit during instrument storage.

Equipment Disposal

Before disposing of the Vanta, check your local laws, rules, and regulations, and follow them accordingly.

BC (Battery Charger - California, USA Community)

The internal battery charger within this device has been tested and certified pursuant to the California Energy Commission's (CEC) requirements; this device is listed on the online CEC's (T20) database.

CE (European Conformity)

This device complies with the requirements of directive 2014/30/EU concerning electromagnetic compatibility, directive 2014/35/EU concerning low voltage, and directive 2015/863 which amends 2011/65/EU concerning restriction of hazardous substances (RoHS). The CE marking indicates compliance with the above directives.

UKCA (United Kingdom)

This device complies with the requirements of the Electromagnetic Compatibility Regulations 2016, the Electrical Equipment (Safety) Regulations 2016, and the Restriction of the Use of Certain Hazardous Substances in Electrical and Electronic Equipment Regulations 2012. The UKCA marking indicates compliance with the above regulations.

WEEE Directive

In accordance with European Directive 2012/19/EU on Waste Electrical and Electronic Equipment (WEEE), this symbol indicates that the product must not be disposed of as unsorted municipal waste, but should be collected separately. Refer to your local distributor for return and/or collection systems available in your country.

China RoHS

China RoHS is the term used by industry generally to describe legislation implemented by the Ministry of Information Industry (MII) in the People's Republic of China for the control of pollution by electronic information products (EIP).

The China RoHS mark indicates the product's Environment-Friendly Use Period (EFUP). The EFUP is defined as the number of years for which listed controlled substances will not leak or chemically deteriorate while in the product. The EFUP for the Vanta has been determined to be 15 years.

Note: The Environment-Friendly Use Period (EFUP) is not meant to be interpreted as the period assuring functionality and product performance.

" 中国 RoHS" 是一个工业术语，一般用于描述中华人民共和国信息工业部 （MII）针对控制电子信息产品 （EIP）的污染所实行的法令。

电气电子产品
有害物质
限制使用标识

中国 RoHS 标识是根据 " 电器电子产品有害物质限制使用管理办法 " 以及 " 电子电气产品有害物质限制使用标识要求 " 的规定，适用于在中国销售的电气电子产品上的电气电子产品有害物质限制使用标识。

注意：电气电子产品有害物质限制使用标识内的数字为在正常的使用条件下有害物质不会泄漏的年限，不是保证产品功能性的年限。

产品中有害物质的名称及含量

部件名称		有害物质					
		铅及其化合物 (Pb)	汞及其化合物 (Hg)	镉及其化合物 (Cd)	六价铬及其化合物 (Cr(Ⅵ))	多溴联苯 (PBB)	多溴二苯醚 (PBDE)
主体	机构部件	×	○	○	○	○	○
	光学部件	×	○	○	○	○	○
	电气部件	×	○	○	○	○	○
附件		×	○	○	○	○	○

本表格依据 SJ/T 11364 的规定编制。

○：表示该有害物质在该部件所有均质材料中的含量均在 GB/T26572 规定的限量要求以下。

×：表示该有害物质至少在该部件的某一均质材料中的含量超出 GB/T26572 规定的限量要求。

Korea Communications Commission (KCC)

이 기기는 업무용 환경에서 사용할 목적으로 적합성평가를 받은 기기로서 가정용 환경에서 사용하는 경우 전파간섭의 우려가 있습니다 .

KC (South Korea Community)

This device complies with the requirements of KN 61000-6-2 and KN 61000-6-4 concerning electromagnetic compatibility. The KCC marking indicates compliance with the above standards.

EMC Directive Compliance

This equipment generates and uses radio-frequency energy and, if not installed and used properly (that is, in strict accordance with the manufacturer’s instructions), may cause interference. The Vanta has been tested and found to comply with the limits for an industrial device in accordance with the specifications of the EMC directive.

FCC (USA) Compliance

NOTE

This product has been tested and found to comply with the limits for a Class A digital device, pursuant to Part 15 of the FCC Rules. These limits are designed to provide reasonable protection against harmful interference when the product is operated in a commercial environment. This product generates, uses, and can radiate radio frequency energy, and if not installed and used in accordance with the instruction manual, might cause harmful interference to radio communications. Operation of this product in a residential area is likely to cause harmful interference, in which case you will be required to correct the interference at your own expense.

WARNING

Changes or modifications not expressly approved by the party responsible for compliance could void the user's authority to operate the product.

FCC Supplier's Declaration of Conformity

Hereby declares that the product,

Product name: Vanta
Model: Vanta

Conforms to the following specifications:

FCC Part 15, Subpart B, Section 15.107 and Section 15.109.

Supplementary information:

This device complies with Part 15 of the FCC Rules. Operation is subject to the following two conditions:

(1) This device may not cause harmful interference.

(2) This device must accept any interference received, including interference that may cause undesired operation.

Responsible party name:

EVIDENT SCIENTIFIC, INC.

Address:

48 Woerd Avenue, Waltham, MA 02453, USA

Phone number:

+1 781-419-3900

ICES-001 (Canada) Compliance

This Class A digital apparatus complies with Canadian ICES-001.

Cet appareil numérique de la classe A est conforme à la norme NMB-001 du Canada.

Code de la santé publique (France)

Conformément aux articles L. 1333-4 et R. 1333-17 du Code de la santé publique, l'utilisation ou la détention de ces analyseurs sont des activités soumises à autorisation de l'Autorité de sûreté nucléaire.

Packing and Return Shipping

If the Vanta is not returned in its transport case, it could be damaged during shipping. Evident reserves the right to void the warranty on instruments damaged while in transit if they are shipped without their transport case. Prior to returning any units, contact Customer Service to obtain the required RMA number(s) and any important shipping information.

Follow the steps below to return your Vanta:

1. Pack the Vanta back into the transport case that it came in, using the original packing materials.
2. Include the RMA in the case, and reference the RMA number in your shipping documents.
3. Close the transport case, and do at least one of the following:
   - Secure the case with plastic zip ties.
   - Pack the transport case within another box.

Regulations for Shipping Products with Lithium-Ion Batteries

IMPORTANT

When shipping a Li-ion battery or batteries, be sure to follow all local transportation regulations.

WARNING

Damaged batteries cannot be shipped through normal routes — DO NOT ship damaged batteries to Evident. Contact your local sales representative or material disposal professionals.

Open Source Software

This product may include (*i*) open source software; and (*ii*) other software whose source code is intentionally published (collectively, hereinafter referred to as "OSS").

The OSS included in this product shall be licensed and distributed to you subject to the terms and conditions applied to the OSS. Please see such terms and conditions of the OSS at the following URL:

https://www.olympus-ims.com/support/vanta-open-source-software-download/

The copyright owners of the OSS are listed at the above URL.

THERE IS NO WARRANTY FOR THE OSS, TO THE EXTENT PERMITTED BY APPLICABLE LAW. THE OSS IS PROVIDED "AS IS" WITHOUT WARRANTY OF ANY KIND, EITHER EXPRESSED OR IMPLIED, INCLUDING, BUT NOT LIMITED TO, THE IMPLIED WARRANTIES OF MERCHANTABILITY AND FITNESS FOR A PARTICULAR PURPOSE. THE ENTIRE RISK AS TO THE QUALITY AND PERFORMANCE OF THE OSS IS WITH YOU. SHOULD THE OSS PROVE DEFECTIVE, YOU ASSUME THE COST OF ALL NECESSARY SERVICING, REPAIR, OR CORRECTION.

Some of the OSS licenses associated with this product may permit you to obtain source code for certain software which Evident has an obligation to provide in accordance with the terms and conditions applied to the OSS. You may obtain a copy of this source code at the following URL. This offer is valid for a period of three (3) years from the date of original purchase. Evident has no responsibility to provide any source code except the source code for certain software.

https://www.olympus-ims.com/support/vanta-open-source-software-download/

Evident does not respond to any inquiries related to any of the source codes obtained at the above URL.

Warranty Information

Evident guarantees your Evident product to be free from defects in materials and workmanship for a specific period, and in accordance with conditions specified in the Terms and Conditions available at https://EvidentScientific.com/evident-terms/.

The Evident warranty only covers equipment that has been used in a proper manner, as described in this instruction manual, and that has not been subjected to excessive abuse, attempted unauthorized repair, or modification.

Inspect materials thoroughly on receipt for evidence of external or internal damage that might have occurred during shipment. Immediately notify the carrier making the delivery of any damage, because the carrier is normally liable for damage during shipment. Retain packing materials, waybills, and other shipping documentation needed in order to file a damage claim. After notifying the carrier, contact Evident for assistance with the damage claim and equipment replacement, if necessary.

This instruction manual explains the proper operation of your Evident product. The information contained herein is intended solely as a teaching aid, and shall not be used in any particular application without independent testing and/or verification by the operator or the supervisor. Such independent verification of procedures becomes increasingly important as the criticality of the application increases. For this reason, Evident makes no warranty, expressed or implied, that the techniques, examples, or procedures described herein are consistent with industry standards, nor that they meet the requirements of any particular application.

Evident reserves the right to modify any product without incurring the responsibility for modifying previously manufactured products.

Technical Support

Evident is firmly committed to providing the highest level of customer service and product support. If you experience any difficulties when using our product, or if it fails to operate as described in the documentation, first consult the user's manual, and then, if you are still in need of assistance, contact our After-Sales Service. To locate the nearest service center, visit https://EvidentScientific.com/service-and-support/service-centers/.

Introduction

The Vanta X-ray fluorescence (XRF) analyzer is a handheld energy dispersive X-ray fluorescence spectrometer, generally referred to as an XRF analyzer.

Main Applications

The Vanta XRF analyzer delivers fast and precise identification and analysis of elements from magnesium to uranium (Mg to U), depending on the selected model and method. A weatherproof/dustproof ultra-rugged design allows diverse analysis testing under severe operating conditions.

The analyzer provides accurate chemical analysis for commercial or industrial areas, including:

- Positive material identification
- Precious metals and gold karating
- Mining and exploration
- Consumer safety
- Scrap processing
- Environmental testing

Analyzer Models and Methods

The current Vanta XRF analyzer models are as follows:

- Vanta Max Series with rhodium (Rh) anode tube
- Vanta Core Series with rhodium (Rh) anode tube
- Vanta Core Series with silver (Ag) anode tube

The Vanta XRF analyzer's methods include the following:

- Alloy
- Alloy Plus
- Precious Metals
- RoHS
- RoHS Plus
- GeoChem (1 beam)
- GeoChem (2 beam)
- GeoChem (3 beam)
- Car Catalyst
- Coating
- Lead Paint
- Soil

Analyzer Features

Certain features are available only on certain analyzer models. Table 1 on page 26 describes the analyzer models and their available features.

Table 1 Analyzer features

Feature	Vanta Core, Max Series
Tube anode material	Rh Ag (Core)
Detector	Performance SDD (Core) Large area performance SDD (Max)
IP rating	IP54
Heat rating	−10 °C to +50 °C
Fan	✓
MIL-STD-810G drop test	✓
Processor	Quad core
Hot swap	✓ (Max only)
GPS	✓ (Max only)

Table 1 Analyzer features *(continued)*

Feature	Vanta Core, Max Series
Camera/Collimation Package: Aiming camera Panoramic camera Collimation	Optional
IR proximity sensor	✓
Barometer/Air density correction	✓
Detector protection	Kapton mesh window (CORE series), shutter (CORE, MAX series)
Pogo pin connection	✓

1. Safety Information

This chapter contains important safety information for using the Vanta XRF analyzer.

1.1 Radiation Safety Information

IMPORTANT

Always make operational safety your highest priority. Heed all warning labels and messages.

The Vanta XRF analyzer is a secure and dependable instrument when used according to the Evident recommended testing techniques and safety procedures. However, the Vanta produces ionizing radiation and, as such, it should only be used by individuals trained in correct operating techniques and authorized to use X-ray producing devices.

The radiation detected on any outside surface (excluding the measurement window area) is below limits for an unrestricted area.

WARNING

X-ray tubes in the Vanta XRF analyzer can emit ionizing radiation. Prolonged exposure can cause serious illness or injury. It is the responsibility of Evident customers to follow the operating instructions and safety recommendations in this manual and good radiation control practices.

NOTE

Vanta instruments create x-rays with a high-voltage x-ray tube. Vanta instruments do not contain a radioactive source to create x-rays.

1.2 Radiation Safety Program

Evident strongly recommends that organizations who use Vanta XRF analyzers implement a formal radiation safety program that includes the following:

- Dose monitoring of critical personnel
- Monitoring of area radiation levels
- Information specific to the site and application of the XRF system
- An annual review (and update, if necessary)

"Safety Administration" on page 39 provides a more comprehensive safety discussion for operators and managers.

1.3 X-Ray Safety

X-ray safety is a priority at all times and in all testing situations.

WARNING

- Evident analyzers must be used by trained and authorized operators in accordance with proper safety procedures. Improper usage may circumvent safety protections and could potentially cause harm to user.
- **Canada Only:** All users shall be certified in accordance with the requirements of NRC Standard CAN/CGSB-48.9712-2006 / ISO 9712:2005.
- Pay attention to all warning labels and messages.
- The Vanta owner is responsible to ensure that the analyzer is properly registered with the appropriate authorities in their location.

- Do not use the Vanta if it is damaged. In such case, arrange for qualified personnel to perform a radiation safety test. Contact Evident or its authorized service representative to repair any damage to the analyzer.

1.4 Safety Features

To control X-ray emissions and thereby minimize the possibility of accidental exposure, the Vanta XRF analyzer has a safety interlock structure consisting of the features listed below. The active features can vary from location to location depending on regulations and customer preferences. If a certain option is required in your area, your Vanta should be factory-configured for that option.

1. Proximity sensor

   Within three seconds of starting a test, the Vanta detects the sample in front of the measurement window. If no sample is detected, the test aborts to prevent excessive accidental exposure and the X-rays shut off. The tube current decreases to 0.0 μA, and the radiation LED stops blinking. Also, if the XRF analyzer is pulled away from the sample while a test is in progress, testing stops within three seconds.

   The optional infrared (IR) proximity sensor on the Max and Core models (bundled with the optional camera) is a secondary method that the Vanta analyzer uses to detect a sample in front of the measurement window. This method relies on sample reflectivity, so the sensitivity of the sensor depends on sample type.
2. Software trigger lock

   The trigger lock can be turned on or off in the user interface. When the trigger lock is on, no testing can take place until the trigger is unlocked.
3. Two-handed operation

   The Vanta analyzer can be set up so that the Back button must be pressed with one hand and then the trigger must be pulled and held with the other hand in order to start a test.
4. Sleep/Wake

   The Vanta analyzer turns its screen off and goes to sleep after a preset amount of time, which you can set in the user interface. A trigger pull (or screen tap) wakes the Vanta from sleep. A second trigger pull starts a test.

5. Deadman

   You can also configure the Vanta with a “deadman’s trigger” operational mode, where the trigger must be continuously pulled for the duration of the test. Releasing the trigger at any time immediately stops the x-rays in this mode.

6. Vanta Work Station

   The Vanta analyzer can be set to require the use of a Vanta Work Station for all analysis or only those analyses using a 50 kV excitation.

As an owner of a Vanta XRF analyzer, you should implement the following recommended safeguards:

- Limited access

  Keep the Vanta in a controlled location to which only trained and authorized users have access.

- Trained operators

  Post a sign near the Vanta analyzer indicating that it must only be used by operators who have completed a training course provided by your company, or who have attended an Evident training course and comply with any other requirements stipulated by local regulatory authorities. When the Vanta is turned on, the user interface touch screen displays a message indicating that the XRF analyzer should only be used by authorized personnel.

- Shielding issues

  The Vanta emits a tightly collimated beam of X-ray radiation. Although attenuation occurs, the beam trajectory may extend up to many meters through open air.

IMPORTANT

Refer to governing regulations for compliance requirements applicable to the installation area, dose limits, etc. Requirements differ depending on the region of your particular country. Do not rely solely on this manual for instructions.

Adequate shielding is achieved by implementing the following measures:

- Establishing a no-access zone at a sufficient distance from the Vanta measurement window, which will allow air to attenuate the beam.
- Enclosing the beam working area with protective panels (3.0 mm stainless steel panels are capable of attenuating the beam to background levels).

Contact your sales representative for assistance and recommendations on interlocks and applications that limit radiation exposure.

- Trigger controls

  The Vanta trigger controls include the proximity sensor, software trigger lock, two-handed operation, deadman trigger, and Vanta Work Station.

IMPORTANT

Canadian regulations suggest use of a deadman trigger at all times. Do not disable this feature.

1.5 General Precautions

Comply with the precautions indicated in this chapter to reduce the following risks:

- Users
  - Physical injury
  - Electric shock
  - Radiation exposure
- Equipment damage
  - Measurement window
  - Overheated electronics and other internal components

1.6 Service Considerations

Except as expressly noted in this document, do not service any Evident product yourself. Opening or removing the external housings may expose you to electric shock and subject the instrument to mechanical damage, and it also voids the warranty.

IMPORTANT

Any required servicing must be performed by Evident or one of its authorized service representatives. Failure to observe this condition could result in voiding of the warranty. The ONLY exceptions to this rule are the replacement of a damaged measurement window and installation of the optional fan. See “Maintenance and Troubleshooting” on page 89 for more details.

Types of problems or conditions that require service are, but not limited to, the following:

- Damaged power cords
- Excessive spills or corrosive liquids on the instrument or accessories
- A battered, dropped, or physically damaged instrument
- A Vanta XRF analyzer that does not operate normally when operating instructions are followed

1.7 Electrical Precautions

The following list of guidelines is essential for safe electrical operation of the Vanta XRF analyzer and its accessories:

- Install the battery into the Vanta carefully. Do not damage the connections (see “Replacing the XRF Analyzer Battery” on page 65).
- Use the correct battery or AC power adaptor for the Vanta XRF analyzer.
- Make sure that the voltage is appropriate (100–240 V/ 50–60 Hz) for operation of the AC power adaptor. See “Specifications” on page 99 for electrical specifications.
- Do not overload the electrical outlet, power strip, or convenience receptacle.
- Do not exceed 80% of the branch circuit rating.

1.8 Cables and Cords

The Vanta XRF analyzer is delivered with one AC power adaptor for the Vanta analyzer (standard).

The AC power adaptor has a standard IEC 3 conductor power cord that includes a safety grounding plug. The power cord and plug are chosen in compliance with local electrical codes and standards.

One USB data cable is supplied (P/N: Q0200487): USB A connector to mini USB B connector.

Safe and proper handling of cables and cords

- Connect the power cords to a properly grounded and easily accessible power outlet.
- Do not defeat or bypass the ground conductor.
- Install all cords in accordance with applicable regulations.

1.9 Indicators and Statuses

The Vanta XRF analyzer has several indicators that alert the operator to the status of the unit.

1.9.1 Power Indicator

The power indicator ( ) is located on the power button below the touch screen (see Figure 1-1 on page 35).

Figure 1-1 Power button

1.9.2 X-Ray Indicator

An X-ray indicator is located on the upper rear portion of the Vanta XRF analyzer and can be seen from the top, sides, and back (see Figure 1-2 on page 36), and a message also appears on the screen when X-rays are being emitted (see Figure 1-3 on page 37). The X-ray indicator alerts you to the state of the X-ray tube:

- **X-ray indicator is flashing ON (flashing radiation LED)**

  This signifies that:

  - The X-ray tube is powered to full operational capacity.
  - The Vanta is emitting X-ray radiation through the measurement window.

  The Vanta must be pointed toward a test sample.

Figure 1-2 X-ray indicator (top and side)

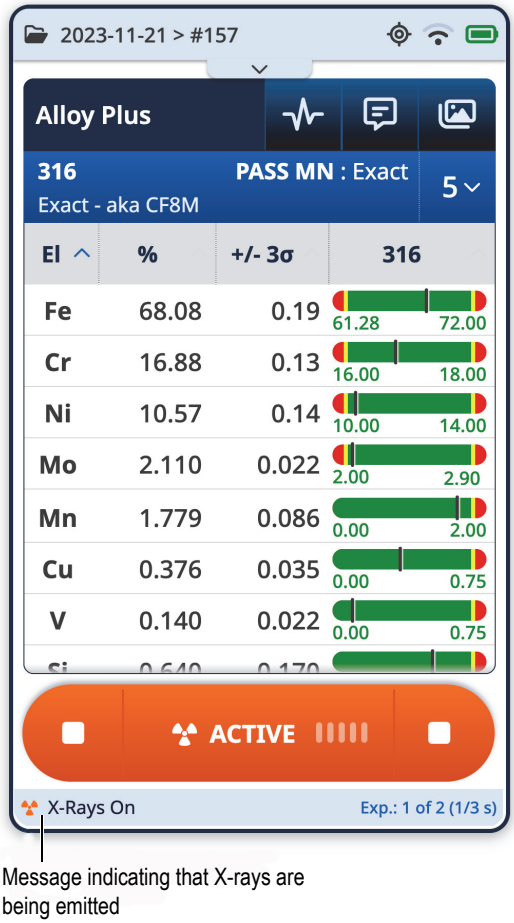

Figure 1-3 X-ray indicator message on the Vanta screen

1.9.3 Test Screen

While samples are being tested, the test screen status bar provides a progress indicator (see Figure 1-4 on page 38). When the task is completed, a **Ready** indicator is displayed (ready for next operation).

Figure 1-4 Status bar

1.10 Safety Guidelines

Before you begin operating the Vanta XRF analyzer, it is important to read this section so that you know how to safely handle the XRF analyzer to avoid exposure to radiation.

Follow the practical safety guidelines listed below at all times.

WARNING

To prevent excessive exposure to ionizing radiation, follow these measures:

- DO NOT POINT the Vanta toward yourself or any other person during operation.
- NEVER use your fingers or the palm of your hand to hold the sample in place.
- Make sure that no other personnel are located within one meter (three feet) of the Vanta XRF analyzer's X-ray beam.

Safe handling of the Vanta analyzer during operation

- Point the Vanta XRF analyzer at the sample, ensuring that no part of your body (including hands and fingers) is near the measurement window.
- Make sure that the Vanta probe (with window) is placed on the target. Provided that the window is completely covered, the radiation emitted in the area surrounding the sample will be as low as possible for that given sample.
- Do not test samples while seated at a desk or table with the beam directed through the table. If the sample is placed on a desk made of wood or any other nonmetallic material, some radiation will penetrate the desk, subjecting your legs or feet to exposure.

These measures will help ensure that none of your body parts are exposed to excess radiation exposure.

1.11 Safety Administration

This section provides information regarding the following radiation safety measures:

- Radiation safety training recommendations
- Dosimeter badges
- Dosimeter safety program
- Dosimeter suppliers
- Registration requirements

1.11.1 Radiation Safety Training Recommendations

Your respective country or region has specific regulations and guidelines for using ionizing radiation generated by X-ray tubes. It is important to inform yourself about these rules.

NOTE

For the convenience of clients, Evident has compiled a list of recommendations:

- Provide generic guidance on the ALARA (as low as reasonably achievable) approach to radiation safety.

- Do not replace specific policies of any government entity or organization.

Personal Monitoring

Radiation control regulations may require implementation of a radiation monitoring program, in which each instrument operator wears a film badge or thermoluminescent dosimeter (TLD) for an initial period of one year to establish a baseline exposure record. Continued radiation monitoring after this period is recommended but may be discontinued if accepted by radiation control regulators. See “Dosimeter Suppliers” on page 43 for a list of film badge providers.

Proper Usage

Never point the Vanta XRF analyzer toward another person. Never perform tests with the Vanta pointing into the air. Never hold samples in your fingers or hands during analysis. During testing, an area of at least one meter (three feet) surrounding the target sample should remain unoccupied.

Specific Controls

When the Vanta XRF analyzer is not in use, store it in a locked case or cabinet. During operation, make sure that the Vanta remains under the direct control of a factory-trained, certified operator. Set and protect the login password for each user.

Time, Distance, and Shielding Policies

Operators should limit the amount of time they spend around the energized Vanta XRF analyzer, maximize their distance from the analyzer window, and shoot into high-density materials whenever possible.

Preventing Exposure to Ionizing Radiation

All reasonable measures, including labeling, operator training and certification, and the concepts of time, distance, and shielding, should be implemented to limit radiation exposure to as low as reasonably achievable (ALARA).

1.11.2 Dosimeters

Dosimeters record accumulated radiation exposure over a specific period of time (see Figure 1-5 on page 41). Dosimeters are used to monitor individuals who work with devices that emit ionizing radiation or who work in close proximity to someone else working with such devices.

Figure 1-5 Dosimeters — Various styles

When purchasing badges or rings, always select the type used for X-ray and low-energy gamma radiation.

IMPORTANT

Dosimeter badges are required in some countries or regions and are optional in others. Evident recommends that all Vanta analyzer operators wear a dosimeter (badge or ring) for at least the first year of operating their analyzer(s).

Evident recommends that the ring badge be worn on a finger of the hand opposite to the one holding the analyzer to ensure that the most common source of accidental exposure (from grasping small samples during analysis) is recorded.

NOTE

Every country (including each region, state, or province within a country) may have different regulations. Always consult your local Radiation Protection Authority or Evident for information and recommendations.

1.11.3 Dosimeter Safety Program

A typical dosimeter-based safety program follows the steps listed below:

1. The company develops a dosimeter program with an independent service contractor. Together, they establish the quantity of badges needed and the frequency of analysis (a monthly or quarterly interval).
2. The company receives the first lot of badges and distributes them to its analysts/operators.
3. At the end of the interval:
   a) The company collects the badges and returns them to the service contractor for analysis.
   b) At the same time, the service contractor delivers another lot.
4. The company distributes the new set of badges, thereby maintaining a continuous protection/monitoring program for its employees.
5. The service contractor prepares a report for the company. The report tabulates any X-ray dose received, and identifies any persons with readings that exceed typical background radiation.
6. The safety monitoring cycle is repeated from steps 1 to 5. Any dose which exceeds limits set by the program (determined by monitoring use patterns) must be investigated and, if sufficiently high, reported to your regulatory agency.

NOTE

The service contractor’s written records are very important to a company’s overall safety documentation plan.

1.11.4 Dosimeter Suppliers

IMPORTANT

For suppliers approved for use in Canada see Table 3 on page 43.

Some of the leading dosimeter supply companies are listed in Table 2 on page 43.

Table 2 Dosimeter suppliers approved internationally

Company	Location	Telephone
AEIL	Houston, Texas	1-713-790-9719
Sierra Dosimetry	Escondido, CA	1-866-897-8707
Mirion Dosimetry Services	Irvine, California	1-800-251-3331 (toll free US/CAN)
Landauer	Glenwood, Illinois	1-708-755-7000
Landauer, Inc.	Oxford, England	44 1865 373008
Nagase Landauer, ltd.	Japan	81 33-666-4300
LCIE Landauer	Paris, France	33 1 40 95 62 90
Landauer	Beijing, China	86 10 6221 5635

Dosimeter supply companies currently approved by Canadian Federal, Provincial, and Territorial Radiation Protection committees are listed in Table 3 on page 43.

Table 3 Dosimeter suppliers approved in Canada

Company	Location	Telephone
Mirion Dosimetry Services	Irvine, CA	1-800-251-3331
Landauer	Glenwood, Il	1-708-755-7000

Table 3 Dosimeter suppliers*(continued)*approved in Canada

Company	Location	Telephone
National Dosimetry Services (Health Canada)	Ottawa, Canada	1-800-261-6689

1.11.5 Registration Requirements

Contact Evident for assistance with locating registration requirements.

- United States of America and most other countries
  - Most states require some form of registration and generally require registration to be submitted within 30 days of receipt of the system.
  - Some states require advance notification.
- Canada
  - To use the Vanta as an “open beam” XRF analyzer, the Natural Resources Canada government agency requires that operators be licensed to its standards. Note that neither the XRF analyzer itself nor its location need to be licensed unless your province has additional requirements. Always check with your local authorities.
  - When the Vanta is used as a “closed beam” system (for example, in a workstation/test stand environment), the operator does not need to be licensed.
  - See “ICES-001 (Canada) Compliance” on page 20 for Agency Statement of Compliance information and relevant contact points.
- All countries
  - Customers are advised to consult their local Radiation Protection Authority for specific regulatory information.

Typical Device Registration Information

The following information is usually requested by a licensing agency:

Purpose of device

Analytical or industrial. Make sure that you inform the government registration office that the Vanta will NOT be used for radiography or medical use. (“ICES-001 (Canada) Compliance” on page 20 for operating and qualification requirements).

Radiation safety officer

List the person who monitors training and safe use and who controls access to the Vanta XRF analyzer.

Authorized users

List the analysts/operators who have been trained and authorized to operate the XRF equipment by the instrument owner and/or regulatory agency.

Operating parameters of the Vanta **XRF analyzer**

8–50 kV; 5–200 µA max (depending on the model, 4 W maximum power output)

Type of system

Handheld/portable

User training specification

Indicate that only individuals who have received manufacturer training documented by a manufacturer training certificate can operate the XRF analyzer. Additional training may be required. Contact local regulatory agencies to determine the level and type of training required.

Personal monitoring

Many government-agency registration forms ask you to indicate whether or not you intend to perform dosimeter monitoring.

IMPORTANT

Always keep the following documentation on hand at the job site:

- A copy of the License Registration
- Other pertinent government-agency documentation
- Copies of any dosimeter analysis reports
- A copy of the user manual for this equipment

---

2. Package Contents

A complete Vanta package consists of an ergonomically designed and lightweight handheld XRF analyzer and several standard accessories. There are also optional accessories available. This chapter contains lists and descriptions of the various components.

2.1 Unpacking the Vanta XRF Analyzer

Vanta XRF analyzers and their accessories are shipped in industrial transport cases.

To unpack the Vanta XRF Analyzer

1. Open the case, locate the shipping papers, documentation, and USB drive, and then remove them from the transport case.
2. Inspect all items for damage, and report any problems to Evident immediately.

WARNING

If there is any damage to any of the components, do not attempt to use the Vanta XRF analyzer.

2.2 Case Contents

The following items are the included in the Vanta package:

Table 4 Vanta case contents

Item	Vanta Core, Max Series
Vanta XRF Analyzer	✓
AC power adaptor	✓
Battery charger	✓
Li-ion battery	✓(2)
microSD card (installed in microSD port)	✓
USB drive with product documentation	✓
USB cable (USB A to USB mini B)	✓
Extra windows	✓(10)
Wrist strap	✓

2.3 Vanta Analyzer Components

Table 5 on page 49 lists the Vanta XRF analyzer's components.

2.4 Standard Accessories

Table 5 Vanta Max and Core Series

Component key		Vanta XRF analyzer
1	Probe	
2	Measurement window with optional cameras and IR proximity sensor	
3	Window plate	
4	Work Station connector	
5	Trigger	
6	Handle	
7	Battery	

Table 5 Vanta Max and Core Series *(continued)*

Component key		Vanta XRF analyzer
8	Connector access cover	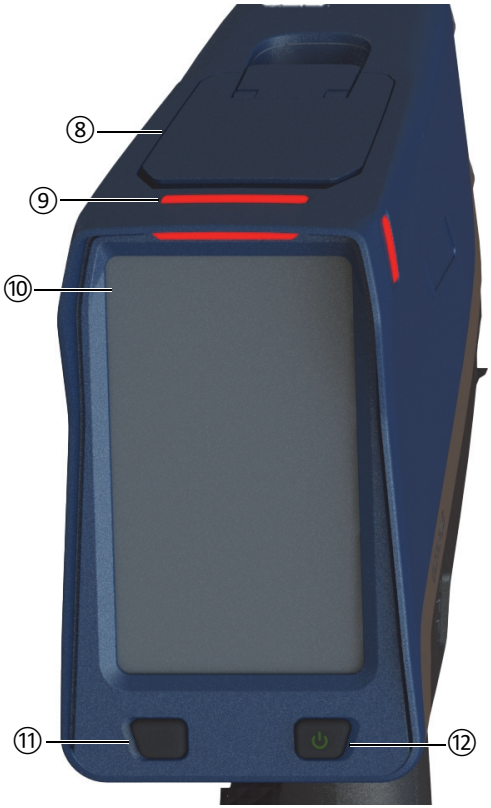
9	X-ray warning indicator	
10	User interface touch screen	
11	Back button	
12	Power button	

2.5 Standard Accessories

Table 6 on page 50 lists the Vanta standard accessories:

Table 6 Vanta standard accessories

Item	Vanta Core, Max Series
AC power adaptor (P/N: U8020997) and power cord (region specific)	✓

Table 6 Vanta standard accessories *(continued)*

Item	Vanta Core, Max Series
Battery charger	✓
Li-ion battery (P/N: Q0201451)	✓(2)
microSD card (installed in microSD port P/N: Q0200519)	✓
USB drive with product documentation	✓
USB cable (USB A to USB mini B P/N: Q0200487)	✓
Extra windows	✓(10)
Wrist strap	✓
Transport Case (P/N: Q0200520)	✓

2.5.1 AC Power Adaptor

The battery charger and the Vanta analyzer are connected to the main power supply using the AC power adaptor (see Figure 2-1 on page 51). The battery charger must be used with the AC power adaptor. Use of the AC power adaptor with the Vanta analyzer is optional.

Figure 2-1 AC power adaptor

2.5.2 Power Cords

Region specific power cords are available for use with the AC power adaptor (see Figure 2-1 on page 51). Make sure that the power cord included with your Vanta XRF analyzer is appropriate for your region. See Table 7 on page 52 for more information.

Table 7 Region specific power cord options

Region	Plug	U8 number
Australia	Type I	U8840005
Brazil	Type J	U8769007
China	Type I	U8769008
Denmark	Type K	U8840011
European	Type F	U8840003
Italy	Type L	U8840009
Japan	Type A	U8908649
South Africa, Hong Kong, India, Pakistan	Type D/M	U8840013
South Korea	Type F	U8769009
UK	Type G	U8840007
USA	Type B	U8840015

2.5.3 Batteries

The Vanta XRF analyzer comes standard with two removable Li-ion batteries. See “Vanta Batteries” on page 65 for more details.

Figure 2-2 Vanta Li-ion battery

2.5.4 microSD Card

A microSD card is installed in the Vanta XRF analyzer for storage of test data.

2.5.5 USB Drive

The Vanta XRF analyzer comes standard with a USB drive. The USB drive comes loaded with documentation. It can also be used to store test data.

2.5.6 USB Data Cable

Some Vanta XRF analyzers come standard with one USB A to USB mini B data cable (P/N: Q0200487). This cable provides the ability to connect to a PC and transfer information to or from the Vanta analyzer (see Figure 2-3 on page 54).

Figure 2-3 USB data cable

2.5.7 Measurement Window Films

The Vanta XRF analyzer comes standard with a bag of measurement window films. Film composition depends on the model and the application (see Table 10 on page 90).

2.6 Optional Accessories

Table 8 on page 54 lists the optional Vanta accessories.

Table 8 Vanta optional accessories

Item	Vanta Core, Max Series
Vanta Work Station	✓
Wi-Fi®Wi-Fi® USB adaptor	✓
Bluetooth® USB adaptor	✓
Fan	✓
Holster	✓
Soil Foot	✓

Table 8 Vanta optional accessories *(continued)*

Item	Vanta Core, Max Series
Field Stand	✓
Probe Shield	✓
USB cable (USB A to USB mini B)	Included
Wrist strap	Included

3. Operation

This chapter provides information about the following:

- Configuring the Vanta XRF analyzer
- Using the Vanta XRF analyzer

  Refer to the *Vanta Family X-Ray Fluorescence Analyzer User Interface Guide* for a complete description of the user interface.

WARNING

Carefully read "Safety Information" on page 29 before handling the Vanta XRF analyzer. Misuse of the Vanta analyzer could result in serious illness or injury.

3.1 Data Port

The data port contains the Vanta XRF analyzer's I/O connections.

To open the data port cover

1. Lift the door tab, and pop up the cover (see Figure 3-1 on page 58).

Figure 3-1 Cover unlock

2. Lift the cover to open (see Figure 3-2 on page 58).

Figure 3-2 Cover open

Beneath the data port cover are the following I/O connectors (see Figure 3-3 on page 59):

1. DC power socket
2. 5-pin mini USB connector
3. microSD port
4. USB A connector
5. USB A connector

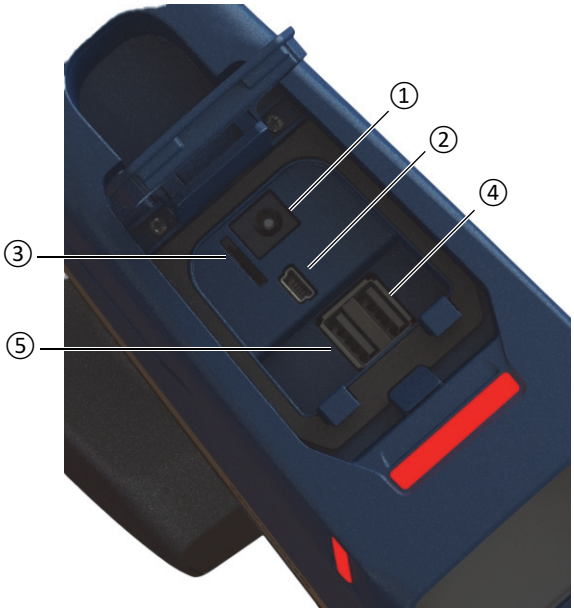

Figure 3-3 Data port I/O connectors

3.1.1 AC Power Adaptor Connector

Connect the AC power adaptor directly to the Vanta to power the XRF analyzer and also charge the battery.

To connect the AC power adaptor

1. Insert the AC power cord plug into a suitable AC outlet.
2. Insert the other end of the AC power cord into the AC socket on the AC power adaptor (see Figure 3-4 on page 60).

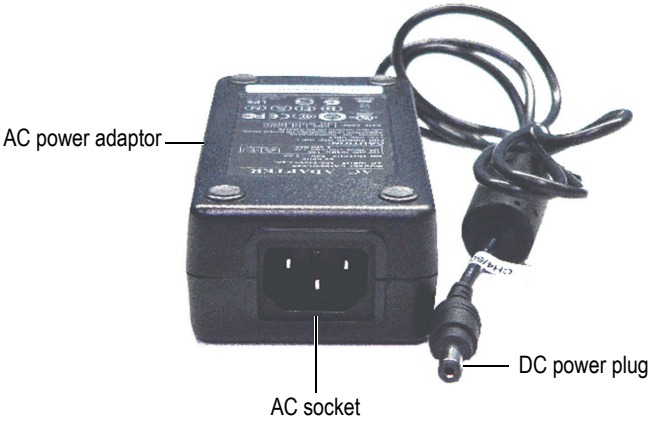

Figure 3-4 AC power adaptor

3. Plug the DC power plug of the AC power adaptor into the DC power socket of the Vanta analyzer (see Figure 3-5 on page 61).

Figure 3-5 Connecting the DC power plug

3.1.2 Mini USB Connector

Connect the supplied USB cable to a PC for data transfer.

3.1.3 microSD Slot

A microSD card for data storage is supplied with the Vanta XRF analyzer.

To insert a microSD card in the slot

NOTE

Do not force the microSD card into the slot. It should easily push down. If not, flip it around so that the metal pins are facing the other side of the slot.

- Insert the card into the Vanta microSD slot, and push down until you hear the card click into place (see Figure 3-6 on page 62).

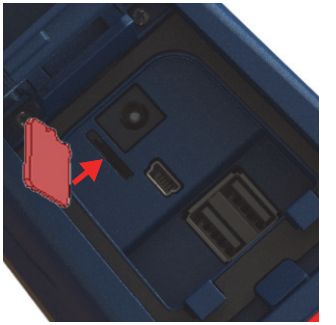

Figure 3-6 Inserting the microSD card

To remove a microSD card

1. Push the microSD card down then let the card pop up.
   Be careful not to let the card pop out of the slot.
2. Lift the card out of the slot.

3.1.4 USB A Connectors

The USB connectors in the Vanta XRF analyzer are intended for use with the Wi-Fi®Wi-Fi® adaptor (optional) and Bluetooth® adaptor (optional). The USB slot on the right is fitted with an adaptor lifter to assist in removing the adaptor in that slot first when both slots are full.

Insert a Wi-Fi®Wi-Fi® adaptor to provide Wi-Fi®Wi-Fi® connectivity. Insert a Bluetooth® adaptor to provide Bluetooth® connectivity.

To insert a Wi-Fi® or Bluetooth® USB adaptor

1. Line the adaptor connectors up with the Wi-Fi® port connectors (see Figure 3-7 on page 63).
2. Push the adaptor down into the slot.

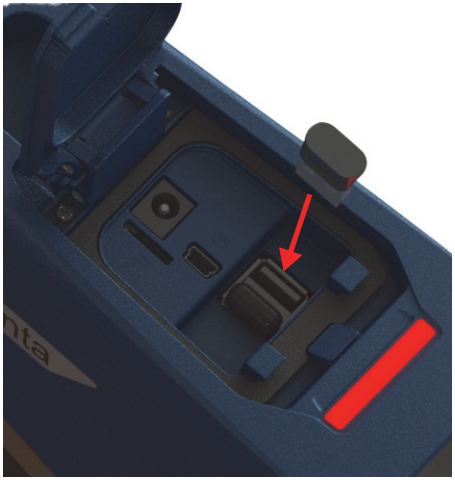

Figure 3-7 Inserting Wi-Fi® adaptor

To remove a USB adaptor

- Grasp the adaptor and pull it out.

3.2 Controls

The Vanta analyzer has several external controls that operate certain aspects of the XRF analyzer. The power button turns on and off the Vanta analyzer. The trigger starts a test. The back buttons control certain aspects of the UI.

Figure 3-8 Vanta external controls

3.2.1 Power Button

The power on/off button is the only means of turning on the Vanta XRF analyzer.

3.2.2 Back Button

The back button moves the focus to the previous data field in the UI (refer to the *Vanta Family X-Ray Fluorescence Analyzer User Interface Guide*).

3.2.3 Trigger

Whenever the Start Test button ( ) is visible in the lower-left corner of the screen, the trigger starts or stops a test.

3.3 Indicators

The Vanta analyzer has several status indicators. See “Indicators and Statuses” on page 35 for information about these indicators, and what they tell you about the state of the analyzer.

3.4 Vanta Batteries

The Vanta XRF analyzer comes standard with two removable Li-ion batteries.

3.4.1 Checking the Battery Charge Status

The charge status can be viewed at any time by checking the battery status icon ( ) in the user interface (refer to the *Vanta Family X-Ray Fluorescence Analyzer User Interface Guide* for more information on the user interface).

3.4.2 Charging the XRF Analyzer Battery Using the AC Power Adaptor

When the AC power adaptor is powering the Vanta XRF analyzer, the Li-ion battery charges regardless of whether the Vanta is powered on or off (see “AC Power Adaptor Connector” on page 59).

3.4.3 Replacing the XRF Analyzer Battery

Perform the following procedure to replace the battery in the Vanta analyzer.

To remove the battery

1. Grasp the Vanta XRF analyzer handle and squeeze the two battery release buttons —the buttons are located on the front of the battery cover (see Figure 3-9 on page 66).

Figure 3-9 Battery release buttons

2. Pull the battery out (see Figure 3-10 on page 66).

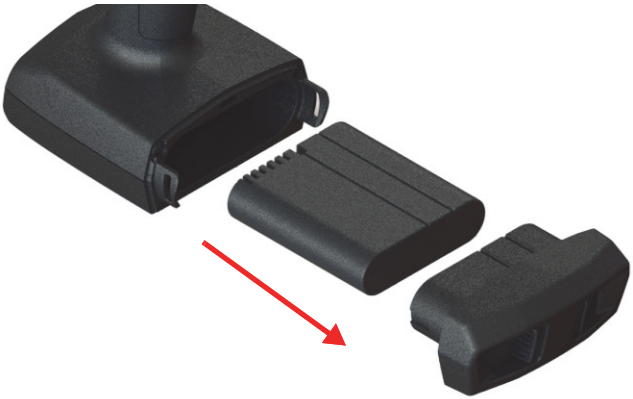

Figure 3-10 Remove the battery

To replace the battery

1. Align the contacts of a fully charged battery with the contacts in the Vanta handle, and then insert the battery into the handle.

   The handle is keyed so that the battery can only be fully inserted if it is correctly inserted in the keyway.

2. Push the battery cover onto the handle until the battery release buttons engage and lock into place.

3.4.4 Hot Swapping the Battery

Vanta Max series instruments are capable of battery hot swapping — removing and replacing a Li-ion battery without shutting down or restarting the Vanta XRF analyzer.

To hot swap the battery

1. Hold the Vanta analyzer with the nose pointing away from you.
2. Remove the Li-ion battery (see "To remove the battery" on page 65).

   The Vanta analyzer displays a status screen that indicates the percentage of internal battery charge remaining while no Li-ion battery is installed in the XRF analyzer (see Figure 3-11 on page 67).

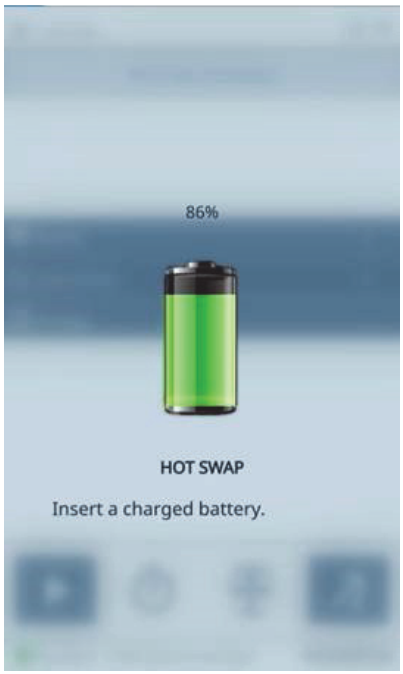

Figure 3-11 Hot swap screen

3. Quickly replace the depleted battery with one that is fully charged (see “To replace the battery” on page 66).

TIP

If the internal battery charge has depleted to the point where the Vanta XRF analyzer will not recover, insert the fully charged battery in the analyzer and use the power button to restart the Vanta analyzer.

NOTE

Refer to the *Vanta Family X-Ray Fluorescence Analyzer User Interface Guide* for comprehensive information about the operational features of the entire Vanta user interface and the attendant functions.

3.5 Test Procedures

This section outlines the procedures that are necessary to perform a test using the Vanta XRF analyzer.

3.5.1 Powering On the XRF Analyzer

Before powering on the Vanta XRF analyzer, make sure that you read the information in “Safety Guidelines” on page 38.

NOTE

The power button DOES NOT turn on the X-ray tube. Tube power cannot be supplied until the Vanta software is launched.

To power on the XRF analyzer

1. Insert a charged battery into the Vanta handle (see “To replace the battery” on page 66).

2. Turn on the Vanta using the power button ( ).

   The Vanta user interface starts up with the Welcome screen displayed (see Figure 3-12 on page 69).
3. Read the radiation safety notice.
4. Read the radiation safety notice (for the full text of the radiation safety notice, see “ICES-001 (Canada) Compliance” on page 20).
5. In the password area (four blank boxes), tap the leftmost box to display the keypad.
6. Enter the password to confirm that you are a certified user.

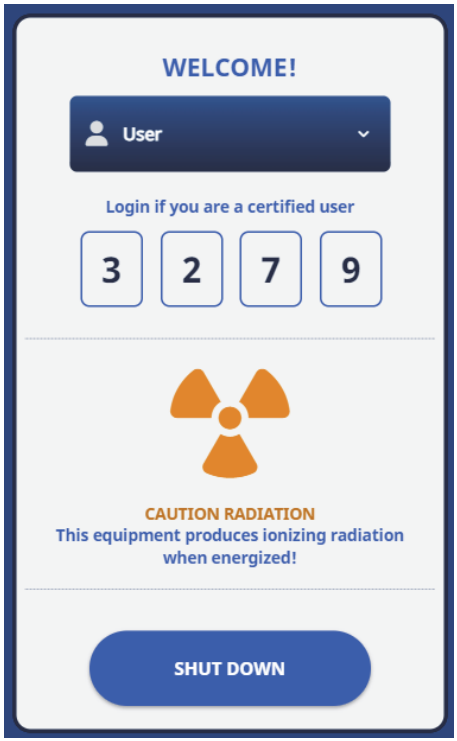

Figure 3-12 Welcome screen

NOTE

The Welcome screen language and radiation symbol will vary depending on your location.

System initialization begins immediately after confirmation.

3.5.2 Powering Off the XRF Analyzer under Normal Conditions

The Vanta XRF analyzer can be powered off under normal conditions or under emergency conditions. If there is an urgent reason to shut down the Vanta, see “Powering Off the XRF Analyzer under Emergency Conditions” on page 71.

To power off the XRF analyzer through the user interface

1. Use your finger to pull down the right side of the top bar to display the menu tray.
2. Scroll down to the **Logout Session** icon (

) and tap.
3. In the Welcome screen, tap SHUT DOWN (see Figure 3-13 on page 70).

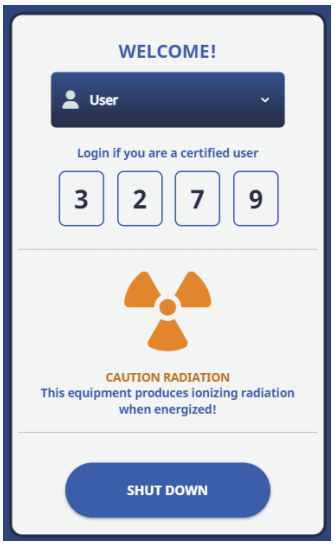

Figure 3-13 Welcome screen

NOTE

The Welcome screen language and radiation symbol will vary depending on your location.

To power off the XRF analyzer using the power button

1. Press and hold the power button ( ) for one second.
2. In the Welcome screen, tap **SHUT DOWN** (see Figure 3-13 on page 70).

3.5.3 Powering Off the XRF Analyzer under Emergency Conditions

In an emergency, use this procedure to force a shutdown.

To power off the XRF analyzer under emergency conditions

NOTE

If the red LED remains illuminated or blinking, and you believe that the Vanta XRF analyzer is “locked” in an on state, follow the instructions listed below.

1. Release the trigger (if the deadman trigger is activated).

   OR

   Tap the Stop Test button ( ).
2. Press and hold the power button ( ) for ten seconds. If the power does not turn off, continue to step 3.
3. Remove the battery immediately (see “Replacing the XRF Analyzer Battery” on page 65).

NOTE

Because the Vanta circuitry permits battery hot swapping, the system power may stay on for more than 30 seconds. However, the X-ray tube voltage returns to zero within one second.

4. If you are using the AC power adaptor, disconnect the DC power plug from the Vanta AC adaptor socket (see Figure 3-14 on page 72).

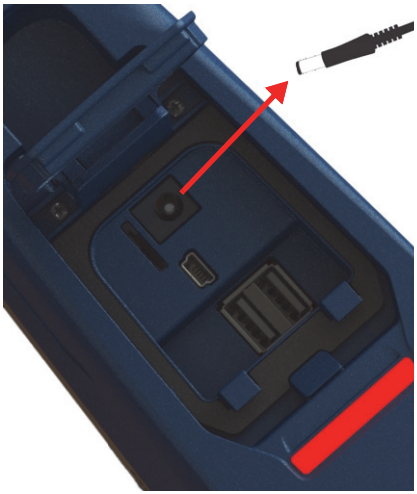

Figure 3-14 Unplugging the DC power plug

3.5.4 Aiming the XRF Analyzer at Large Targets

When the test target is a large stationary object such as a pipe, valve, piece of scrap metal, soil, sediment, geological sample, circuit boards, or consumer products, follow the steps below to properly and safely aim the Vanta XRF analyzer at the target.

To properly aim the XRF analyzer at a large target

1. Always observe the safety guidelines shown in “Safety Guidelines” on page 38.
2. Point the Vanta probe at the sample, ensuring that no part of your body (including hands and fingers) is near the measurement window.

3. Make sure that the Vanta probe (with window) is placed solely on the target.

3.5.5 Aiming the XRF Analyzer at Small Targets

When testing small sample targets such as metal turnings, weld rods, wires, fasteners, nuts, or bolts, follow the procedure below to properly and safely aim the Vanta XRF analyzer at the sample.

To properly aim the XRF analyzer at a small target

WARNING

Do not test samples while seated at a desk or table with the beam directed through the table. If the sample is placed on a desk made of wood or any other nonmetallic material, some radiation will penetrate the desk, subjecting your legs or feet to exposure.

1. Always observe the safety guidelines in “Safety Guidelines” on page 38.
2. Place the sample on a flat surface, or use a plastic clamp to hold it in place for effective and safe analysis of small and irregularly shaped samples.
3. Make sure that the Vanta probe (with window) is placed solely over the sample.

NOTE

If the sample does not completely cover the window, make sure that your background surface does not contain metals (not even trace levels of metals), because the Vanta XRF analyzer may detect the presence of additional metals, which could affect the XRF result.

3.5.6 Starting a Test

At this point you should have already read all the safety guidelines in “Safety Guidelines” on page 38, and the Vanta XRF analyzer should be properly aimed at the target according to the type of material being tested (see “Aiming the XRF Analyzer at Large Targets” on page 72 or “Aiming the XRF Analyzer at Small Targets” on page 73).

There are three possible approaches to starting a test. Regional requirements and your analyzer settings determine the approach you will use.

- Standard — No extra safety features enabled
- Deadman trigger enabled
- Two-handed operation enabled

The chosen approach to start a test will vary from location to location depending on regulations and customer preferences. If a certain option is required in your area, your Vanta analyzer should be factory-configured for that option.

IMPORTANT

Canadian regulations suggest use of a deadman trigger at all times. Do not disable this feature.

To start a test

1. If the Start Test button ( ) is not showing on the screen, tap the Home button ( ). This will take you to the Live View page.

2. Standard method: Tap the Start Test button ( ).
   OR
   Pull and release the trigger.
   OR
   Deadman trigger enabled: Pull and hold the trigger until the test is complete.
   OR
   Two-handed operation: Pull the trigger, and then press the Back button ( ) until the test is complete.

After a test is initiated, the status bar displays the test progress.

NOTE

The results are displayed immediately upon test completion.

To perform a sample test

WARNING

To prevent excessive exposure to ionizing radiation, follow these measures:

- DO NOT POINT the Vanta analyzer toward yourself or any other person during operation.
- When performing tests, never use your fingers or the palm of your hand to hold sample in place.

NOTE

Evident recommends wearing both a ring-style and a badge-style (either clip-on or lanyard) dosimeter. See “Dosimeters” on page 41 and “Dosimeter Safety Program” on page 42 for more information.

1. Navigate to the **Test** screen (see Figure 3-15 on page 76).

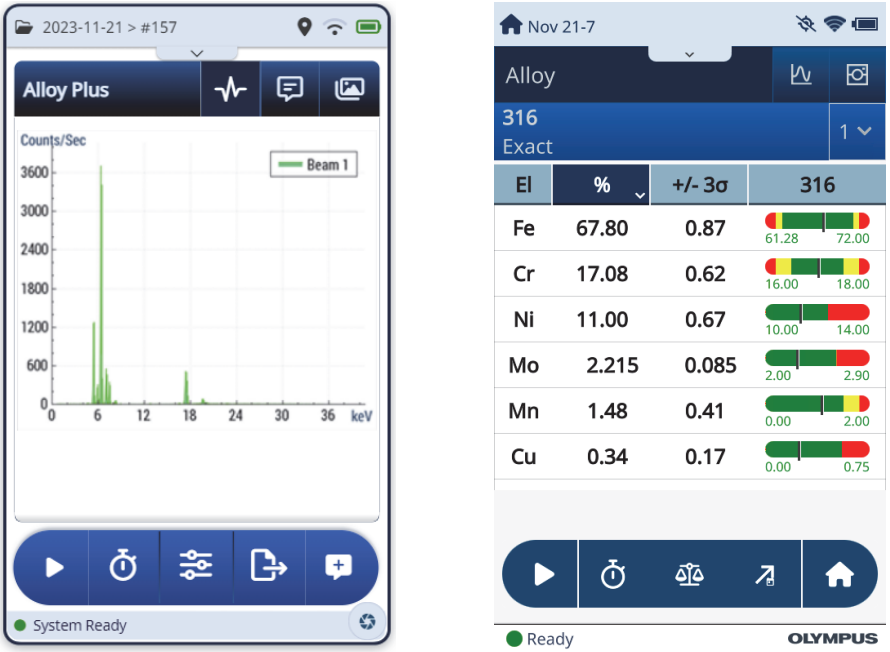

Figure 3-15 Test start and completed screens

2. Make sure that the Vanta measurement window is positioned directly over the sample.
3. Start the test (see “To start a test” on page 74).

   The status bar at the bottom of the screen displays the test progress.
4. When the test is complete, tap the Chemistry, Spectrum, Notes, or Image bar to expand that view (see Figure 3-15 on page 76).

NOTE

At the end of the testing session, it is good practice to export the session results to a PC. Refer to the *Vanta Family X-Ray Fluorescence Analyzer User Interface Guide* for details about the exportation procedure.

3.6 Testing Best Practices

Optimize the Vanta, XRF analyzer's performance by following these best practice guidelines:

- Make sure that the Vanta measurement window is clean and intact. If it is soiled or ripped, replace the window (see "Measurement Window Replacement" on page 89). Evident recommends that you regularly replace the window.
- Avoid damage to the window when testing sharp objects (for example, metal turnings) by hovering above the sample.
- Keep the Vanta XRF analyzer's measurement window properly positioned over or in front of the sample for the duration of the test.
- The sample should completely cover the measurement window for best results.
- The sample should be homogeneous.
- The sample should be thick enough that additional material does not affect the result. For dense alloy samples, this thickness is under a millimeter. For soil or plastic samples, the thickness should as much as 1.5 centimeters (0.59 in).
- Test a check sample and/or a blank sample of known chemistry periodically throughout the day to verify results.

3.7 Alloy Analysis Method Overview

The Vanta family of XRF analyzers currently supports multiple unique methods for metal analysis:

- Alloy Plus:
  - Vanta Max and Core series (SDD detector-based)
- Precious Metals (an addition to the Alloy method)
  - Vanta Max and Core series (SDD detector-based)

Alloy analysis uses a fundamental parameters (FP) algorithm to determine elemental chemistry. This method calculates chemistry from the spectral data without the requirement for stored fingerprints. The Alloy FP calibration is done at the factory, and it requires no user setup or recalibration. The software also searches through an alloy grade library to produce a grade match based on the calculated chemistry. Alloy and Alloy Plus methods can provide a grade ID and chemistry in as little as one second, with increased precision for longer test times.

3.7.1 Match Number Concept

After calculating chemistry using the fundamental parameters algorithm, the Vanta analyzer compares the chemical composition values to grade tables stored in a grade library. The application calculates the value for a parameter called “match number.” This calculation provides an indication of how close the measured alloy chemistry is to the library specification.

- The lower the match number, the better the match.
- A match number of 0 is an exact match, meaning that the calculated chemistry for all elements falls within the grade table specifications.

3.7.2 Match Possibilities

There are three match determination possibilities provided within the Alloy methods:

Single Match

An unknown alloy is matched to one of the grades contained in the Grade libraries, and a Grade ID appears on the **Results** screen. Often, other grades are listed with their accompanying match numbers. The analyst has the opportunity to view their elemental chemistries and to see how they differ from an exact match.

Multiple Matches

In some cases, several grades are shown as possible matches. This can signify one of two conditions:

- A lack of information to definitively separate two or more alloys. Often, increasing the testing time makes it possible to separate the alloys.
- The test sample did not meet any of the existing specifications with enough precision to obtain an exact match identification so nearest matches are shown.

No Match

If no matches are found within the libraries, the words “NO MATCH” appear.

3.7.3 Scrap and Recycling Features

The Vanta XRF analyzer’s Alloy and Alloy Plus methods support many features that specifically enhance scrap processing by maximizing speed and accuracy. The following sections describe these useful features.

3.7.3.1 Grade Match Messaging (GMM)

You or the yard manager can assign messages to specific alloy grades. This is often done to list alternate names for a grade or to provide specific sorting or handling instructions.

3.7.3.2 SmartSort

This feature promotes automated sorting decisions that enable you to maximize speed and sorting accuracy. Some SmartSort features are as follows:

- Short test times using a single beam condition for most grades.
- Specific grades set up to automatically extend testing time to the second beam for proper analysis.
- Maximized speed testing efficiency by automatically extending testing time for light elements (Mg, Al, Si, P, and S), thereby eliminating unnecessarily long tests.

3.7.3.3 Nominal Chemistry

Vanta XRF analyzers have a “nominal value” inclusion function that uses grade ID specifications to incorporate the expected values for elements not measured during analysis. When a confident grade match is made based on elements that *can* be measured, the nominal value inclusion function inserts the expected values for other elements based on known grade specifications.

For example, a test is started and a grade match is made for copper:

- That grade contains an element we cannot detect with XRF — in this case beryllium.
- Yet, from the grade spec the Vanta analyzer determines that there should be 2% beryllium in the grade.
- The Vanta analyzer displays 2% beryllium in the result (everything else adds up to 98%) even though the beryllium was not directly measured. The presence of beryllium is inferred based on the grade specification, so the grade is determined to be beryllium copper.

3.7.3.4 Residuals Settings

Alloy and Alloy Plus methods use a Factory Grade library and Residuals (tramp) settings. The Factory Grade library consists of a set of minimum and maximum values for each element in an alloy.

NOTE

The Alloy Factory Grade library is different depending on the Vanta model.

See "Alloy Grade Libraries" on page 127 for a listing of the alloys that are contained in each Factory Grade library. Please note that the listing was complete and accurate at the time of publication. However, the listing may not match the listing on your Vanta because grades are continually being added to the library.

The Residuals settings are provided for seven base alloys to specify the maximum allowed amount of residual elements. Trace levels of residual (tramp) elements cause two problems. First, they can compromise alloy grade matching — and slow sorting. Second, as alloys are repetitively recycled, residuals such as chrome, manganese, or copper can build up and actually reduce the value of an alloy. Vanta XRF analyzers use the Residuals settings to quickly match the proper grade and also flag the residual elements.

You can search all the libraries individually or together. You can also edit all the libraries, including each Factory Grade library. However, Evident strongly recommends that users do *not* directly edit the Factory Grade library. Instead, copy the Factory Grade library to a user library, then make your edits.

3.7.4 Test Sample Considerations

Coated or painted samples

If a material has been coated, plated, painted, or has had some sort of surface treatment, the Vanta could be misled into identifying a sample as something other than what it actually is. For example, a steel piece painted gray may show high concentrations of titanium from the paint, and may be misidentified as a titanium alloy.

To ensure proper identification of coated materials, grind an area slightly larger than the measurement window in order to remove the coating. It is important to select the correct grinding material to prevent interference with the analysis.

NOTE

Do not use silica-based abrasives to grind coated test materials when performing silicon analysis.

It may not be necessary to completely clean and grind all materials; however, remove obvious metal dust.

Mixed samples, heterogeneous materials

Finished metal pieces may consist of more than one type of metal. In addition, you may wish to measure mixed turnings, or an assortment of small pieces. In such cases, remember that the Vanta analyzer measures the entire area covered by the measurement window, and reports an average chemistry.

NOTE

When analyzing metal pieces or welds, make sure that only the metal of interest is covering the measurement window.

Small and irregularly shaped samples

To measure samples smaller than the measurement window, you should:

- Increase the testing time.
- Maximize the material in contact with the window.

Because the signal from smaller samples is less intense than from samples that completely cover the window, the analysis precision for small parts measurements is reduced. If possible, analyze the largest, flattest side of an irregularly shaped object.

NOTE

- Prevent small, sharp objects from puncturing the measurement window; such objects can cause damage that is expensive to repair.
- Refer to the *Vanta Family X-Ray Fluorescence Analyzer User Interface Guide* for a complete description of the Evident application user interface.

3.8 GeoChem Method Overview

The Vanta XRF analyzer currently supports two unique methods for geochemical analysis:

- GeoChem (40 kV, two beam)
  Vanta Core series and Max series (SDD detector-based)
- Three Beam GeoChem (50 kV three beam)
  Vanta Max Series and Core analyzers with silver anode tube

These methods use a fundamental parameters algorithm that automatically corrects for interelement effects.

The Vanta XRF can analyze:

- *In situ* (directly on the ground)
- Prepared soil samples (in sample cups)
- Bagged samples

3.8.1 Check Standards

It is good practice to periodically measure a blank sample and a check standard throughout the day to help ensure that the data remains as accurate as possible.

The standards provided with Vanta XRF analyzers are contained in special XRF sample cups. These cups have film windows on one side through which the soil can be viewed and analyzed, and solid caps on the other side.

3.8.2 Sample Presentation

***In situ* testing**

In situ testing is performed by pointing the XRF analyzer toward the ground. Clear away any grass or large rocks, and hold the Vanta analyzer, keeping the nose of the probe flush with the ground. After each analysis gently remove any dirt from the measurement window. Make sure that the window is not ripped or punctured.

Bagged or prepared sample testing

Place prepared samples in sample cups, and then perform the analysis through the sample cup window. Place the Vanta measurement window directly over the film side of the sample cup.

Preparation considerations include:

- Avoid measuring very thin samples, which can affect results. Prepare the sample cups with at least 15 mm (0.59 in) of packed sample.
- When analyzing bagged samples, ensure that there is sufficient sample material in the bag to completely cover the window (a minimum sample thickness of 15 mm (0.59 in) is recommended).
- When using bags, cheaper bags with thinner plastic walls are better than more expensive ones with thicker plastic walls.
- When analyzing through bags, light element performance is compromised.

Optional Accessory

The accessories that complement the GeoChem methods are as follows:

- Vanta Work Station – A portable, fully shielded, closed-beam test stand for bench top or remote-controlled testing
- Vanta Field Stand – A smaller, non-interlocked test stand
- Holster – Attaches to your belt to carry the analyzer hands-free
- Soil Foot – A stand to keep the analyzer positioned against the ground

3.8.3 User Factors

The GeoChem methods enable you to create your own set of factors that focus on particular elements of interest or corrects matrix effects. You can make several different factor tables, which permits the analysis of a variety of samples.

Example

A group of samples covering the full concentration range for each element of interest is identified and has a known concentration.

To set the user factors, first plot the data.

IMPORTANT

Make sure that you respect the following order:

1. Vanta XRF analyzer data on x-axis
2. Lab data on y-axis

Determine the linear best fit with both the slope and intercept for each element. The slope and intercepts for these graphs are entered directly into the Vanta analyzer. In many cases, it is sufficient to only enter a correction for the slope, because the intercept is near zero. In other cases, enter the slope and intercept. You can enter multiple sets of user factors for different applications or different ore bodies. A group of factors is given a name, and then the factors are entered. The factor set can then be selected by name.

3.9 Air Density Correction

The Alloy, Alloy Plus, and GeoChem methods have an Air Density Correction feature that automatically corrects calibrations for air density based on barometric pressure and temperature on some models.

3.10 Car Catalyst Method Overview

The Car Catalyst method uses fundamental parameters with a specific calibration for platinum, palladium, and rhodium, which are precious metals found in the catalytic converters used in the automotive industry. Car Catalyst is not offered on models equipped with Rhodium tubes. The rhodium tubes interfere with the analysis of low levels of rhodium found in catalyst materials.

3.11 ROHS Method Overview

The Vanta XRF analyzer currently supports two methods for regulatory based analysis. The core methods and types are as follows:

- RoHS

  Models: Vanta C series with W anode, Vanta M series with W anode, Vanta C series with Ag anode
- RoHS Plus

  Models: ROHS+ for 50 kV units – Vanta M series, VCA, and Vanta Element-S

Toxic metals in consumer electronics are the focus of EU regulations with worldwide application. These directives currently include Restriction of Hazardous Substances (RoHS).

RoHS designates maximum allowable levels of Pb, Cd, Cr6+, Hg, and certain Br-containing flame retardants (PBB and PBDE) in new electrical and electronic equipment sold within the EU.

The suggested limits for RoHS elements in a typical screening program would be as follows:

- <0.1%: Pb, Cr6+, Hg, and Br (as flame retardants PBB and PBDE)
- <0.01%: Cd

The Vanta XRF analyzer is a screening tool for RoHS compliance, and it is used to do the following:

- Directly analyze the amount of toxic metals in electronics.

The Vanta analyzer measures total elemental composition, regardless of speciation of the element. It reports the following:

- Total chromium, including the concentration of hexavalent chromium plus any other forms of Cr.
- Total bromine (XRF cannot distinguish the type of brominated flame retardant present in analyzed materials or in other bromine-containing compounds).

In order for the Vanta analysis to be quantitative, samples must meet the following criteria:

- Homogeneous for the entire analysis width and depth.

If samples are heterogeneous, too thin, or too small, only qualitative screening is possible.

The IEC-ACEA (International Electrotechnical Commission – Advisory Committee on Environmental Aspects) recommends XRF screening.

3.11.1 Automatic Test Sequence

The Vanta XRF analyzer's RoHS method automatically executes a test sequence to determine the following:

- Whether a sample is an alloy, polymer, or mixed
  - "Mixed" indicates heterogeneous samples consisting of both polymer and alloy, such as wires or circuit boards.
- Whether each RoHS element passes, fails, or is inconclusive when compared with a set of stored criteria
  - These criteria are either recommended by the IEC or added by the user.

The sequence begins with the Vanta analyzer using tube settings appropriate for analysis of a polymer sample. The following logic applies:

- If the sample is determined to be a polymer or mixed, the test continues, and a calibration based on a polymer matrix is used.
- If the sample is found to be a metal alloy, the Vanta analyzer switches to a secondary test using an alloy matrix calibration in order to determine correct alloy concentrations.

3.11.2 Sample Presentation

Since many pieces of the plastic analyzed for RoHS compliance are very small, take care to measure them in a safe and accurate manner. See the IEC-ACEA recommendations for minimum test sample thicknesses.

3.11.3 IEC Quantitative Screening Requirements

IMPORTANT

- Though the regulatory landscape is continually changing, the series of six key regulated substances remains the same for electrotechnical products — lead, mercury, cadmium, hexavalent chromium, polybrominated biphenyls, and polybrominated diphenyl ethers. The limits provided in Table 9 on page 87 are meant to be an example for a typical screening program.
- Evident strongly advises that you have your compliance department determine the current status of the requirements that you must meet.

Table 9 Proposed screening limits for RoHS elements

RoHS elements	Pass[a]	Lower limit	Inconclusive[b]	Upper limit	Fail[c]
Polymer elements					
Cd	P	≤ (70 – 3 s)	< x[d] <	(130 + 3 s) ≤	F
Pb	P	≤ (700 – 3 s)	< x <	(1300 + 3 s) ≤	F
Hg	P	≤ (700 – 3 s)	< x <	(1300 + 3 s) ≤	F
Br	P	≤ (300 – 3 s) <	x		
Cr	P	≤ (700 – 3 s) <	x		
Metallic materials					
Cd	P	≤ (70 – 3 s)	< x <	(130 + 3 s) <	F
Pb	P	≤ (700 – 3 s)	< x <	(1300 + 3 s) <	F
Hg	P	≤ (700 – 3 s)	< x <	(1300 + 3 s) <	F
Br			N/A		
Cr	P	≤ (700 – 3 s) <	x		
Electronics					
Cd	P	LOD	< x export	(150 + 3 s) ≤	F
Pb	P	≤ (500 – 3 s)	< x <	(1500 + 3 s) ≤	F
Hg	P	≤ (500 – 3 s)	< x <	(1500 + 3 s) ≤	F
Br		≤ (250 – 3 s) <	x		
Cr	P	≤ (500 – 3 s) <	x		

a. Pass = Results for all elements are lower than the limits shown in this table.
b. Inconclusive = Result of the quantitative analysis, for any of the Hg, Pb, or Cd elements, is in the region defined as intermediate, OR if the result of the elements Br and Cr is higher than the higher limits shown in this table, the analysis is inconclusive. Additional investigation must be performed.
c. Fail = Results for any elements higher than the higher limits shown in this table.
d. x = Concentration value

4. Maintenance and Troubleshooting

This chapter contains maintenance procedures and some possible ways to resolve issues that you may face during operation of the Vanta XRF analyzer.

4.1 Measurement Window Replacement

This section explains how to replace a Vanta measurement window. Evident recommends changing the window if it is dirty, contaminated, broken, or torn.

IMPORTANT

- Never conduct any test using a broken or torn window.
- Immediately replace any broken or torn window.
- For best results, regularly replace the window.
- Make sure the replacement window matches your Vanta series and method. The correct window is required to achieve proper operation and accurate results.

Table 10 on page 90 describes the measurement window types. You must specify the proper film material to match your Vanta and your method (calibration).

Table 10 Measurement window types

Material	Image	Vanta series	Part number	Q number
Prolene, 6 µm PROLENE6-V2		Max	10-038783-00	Q0204218
Prolene, 6 µm with Kapton mesh PROKAP6-V2		Core	10-038780-00	Q0204217
Kapton, 8 µm KAPTON8-V2 (high temp)		Core, Max	10-038784-00	Q0204213

CAUTION

To avoid damage to the Vanta XRF analyzer, comply with the instructions below:

- Do not touch or damage any internal components.
- Do not insert anything into the Vanta analyzer.
- Keep dust and foreign materials out of the Vanta analyzer.

- Make sure that your hands are clean.
- Position the Vanta analyzer with the probe pointing sideways so that any debris or loose screws will not fall into it.
- Do not touch the window film.

4.1.1 Replacing the Vanta Window

This procedure requires that you peel off the old window and place the new window.

To remove the window

◆ Grasp the tab at the bottom of the window and then pull up until the window is completely detached from the probe (see Figure 4-1 on page 91).

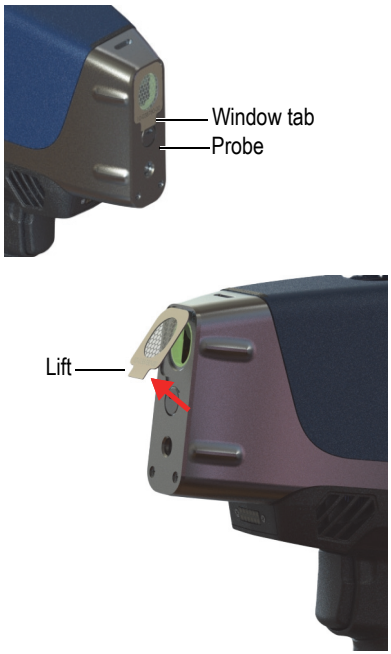

Figure 4-1 Vanta window removal

To replace the window

1. Peel the window completely off the backing material (see Figure 4-2 on page 92).

IMPORTANT

The back of the measurement window is coated with a sticky adhesive. Do not touch the back of the window after removing the backing material.

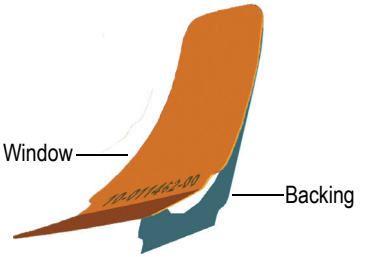

Figure 4-2 Separating window from backing

2. Align and carefully press the window onto the probe (see Figure 4-3 on page 93).

IMPORTANT

Handle the window by the edges to prevent contamination of the measurement area.

Figure 4-3 New window aligned with probe

4.2 Internal Fan Installation

The optional internal fan (P/N: Q0200524) helps cool some Vanta XRF analyzers in environments with high ambient temperatures.

To install the internal fan, you will need a Phillips head screwdriver.

To install the internal fan

1. Power off the XRF analyzer.
2. Remove the battery.

CAUTION

Never remove the Vanta handle with a battery still inserted in it and, conversely, never insert a battery in the handle when it is not properly installed on the Vanta.

3. Using the Phillips head screwdriver, remove the four screws securing the handle and lift the handle from the Vanta body (see Figure 4-4 on page 94).

Figure 4-4 Handle removal

4. Align the internal fan electrical plug with the fan socket and firmly insert the plug into the socket (see Figure 4-5 on page 95).
5. Insert the two supplied screws through the fan screw holes and tighten to the Vanta body using the Phillips head screwdriver.

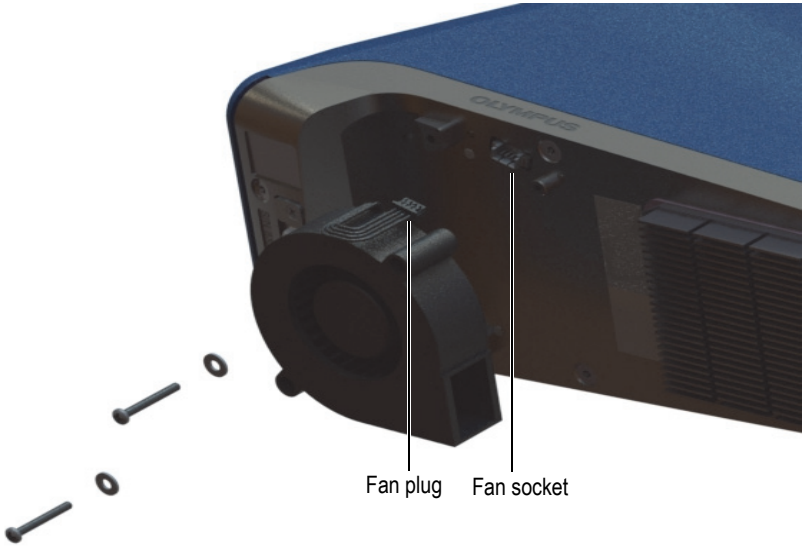

Figure 4-5 Fan installation

6. Reinstall the four screws to secure the handle to the Vanta body (see Figure 4-6 on page 96).

Figure 4-6 Handle replacement

7. Reinstall the battery.

4.3 Troubleshooting

This section proposes some possible solutions to problems you may experience during operation of the Vanta (see Table 11 on page 97). If these measures do not restore the Vanta to full functionality, please contact Evident After-Sales Service. When contacting a service center, please provide the instrument model, serial number, current software version, and a brief description of your issue. The instrument information can be found in the “About Device” screen.

Table 11 Troubleshooting guide

Problem	Possible solutions
The Vanta does not turn on.	Ensure the battery is securely installed and sufficiently charged. OR Try using the AC power adaptor to power the Vanta.
The user interface is frozen.	Turn the Vanta off and on. (Press and hold the power button to force a shutdown.)
The touch screen is not working.	Use the controls to navigate through the user interface.
The trigger is not working.	Use the Start button on the touch screen. If the Start button is replaced by a lock icon (), X-rays are disabled. To unlock the trigger: 1. Swipe down from the upper left to reveal the system tray. 2. Tap the Trigger Lock button () to unlock the trigger.
The analysis results do not match with the expected values.	• Test certified reference material. • Ensure that the measurement window is clean and free of contamination. • Ensure that the sample is clean, homogeneous, and free of contamination. • Inspect the spectrum to confirm that peaks are present for the element of interest.

Appendix A: Specifications

This appendix outlines the specifications for the Vanta XRF analyzer, its work station, and its accessories (see Table 12 on page 99 and Table 13 on page 100).

Table 12 Vanta XRF analyzer specifications

	Specifications
Dimensions (W×H×D)	Vanta Core and Max — 10.4 cm × 29.6 cm × 24.1 cm (4.1 in. × 11.6 in. × 9.5 in.)
Weight	Vanta Core — 1.85 kg (4.06 lb) with battery; 1.62 kg (3.56 lb) without battery Vanta Max — 1.9 kg (4.17 lb) with battery; 1.67 kg (3.67 lb) without battery
Excitation source	4-watt X-ray tube — Ag, Rh, or W anode (application optimized) 5–200 µA Max Rhodium, Max Tungsten, Core Silver: 8–50 keV Core Rhodium and Core Tungsten: 8–40 keV
Primary beam filtration	Eight automatically selected filter positions per beam per method
Detector	Max series: Large area silicon drift detector Core series: Silicon drift detector
Power	Removable Li-ion batteries or 18 V AC power adaptor unit
Elemental range	Max Rhodium, Core Series = Mg–U; Max and Core Tungsten = Al–U
Power requirements for AC adaptor	100–240 VAC, 50–60 Hz, 70 W max (P/N: U8020997)
Display	Color “transflective” touch screen (800 × 480, WVGA) with 16-bit LCD interface; capacitative touch panel supporting gesture control

Table 12 Vanta XRF analyzer specifications *(continued)*

	Specifications
Pressure correction	Built-in barometer for automatic altitude and air pressure correction
Operating environment	Temperature Vanta Core and Max: –10 °C to +50 °C (continuous duty cycle with optional fan) Humidity: 10% to 90% relative humidity, noncondensing
Pollution Degree	4
Drop test	Military standard 810G, 1.3 m (4 ft) drop test
IP rating	IP54: Protected from dust and protected against water splashing from all directions
GPS	Embedded GPS/GLONASS receiver (Vanta Max only)
Operating system	Linux
Application software	Evident proprietary data acquisition and processing package
USB interface	Two USB 2.0 type A host ports for accessories such as Wi-Fi® and Bluetooth adaptors and USB flash drives One USB 2.0 type mini-B port for connection to computer
Wi-Fi®	Supports 802.11 b/g/n (2.4 GHz) via optional USB adaptor
Bluetooth	Bluetooth supported via optional USB adaptor
Internal fan	Optional
Aiming camera (optional)	CMOS, full VGA
Sample camera (optional)	5 megapixel CMOS camera with autofocus lens
Data storage	1 GB industrial microSD card in slot for expandable storage

Table 13 Accessory specifications

Accessory	Specifications
Work Station	• A portable equipment stand providing a fully shielded closed-beam system
AC power adaptor	• 18.0 V, 3.9 A, 90.0 W • Energizes the Vanta and the battery charger
Vanta Control App	• Facilitates remote analyzer control, data download, spectral review, and report generation • Comes standard with all Vanta analyzers
Wi-Fi® USB adaptor	Connects to a USB 2.0 type A host port

Table 13 Accessory specifications *(continued)*

Accessory	Specifications
Bluetooth® USB adaptor	Connects to a USB 2.0 type A host port
USB drive	Loaded with documentation and a backup profile
Measurement window films	Composition depends on the model and the application
Fan (optional)	Helps cool the analyzer in environments with high ambient temperatures
Holster	• Has a strap with a fastener to secure the instrument • Utilizes MOLLE/PALS webbing for additional attachment options • Brass shielding
Soil foot	• Provides a stable three-point support for the Vanta analyzer • Facilitates hands-free analysis
Field stand	A lightweight, mobile test stand and shielded sample chamber
Hot heel	For testing high-temperature piping or equipment up to 480 °C (900 °F)
Weld mask	• Prevents interference from the base metal when analyzing weld beads • Collimates analysis to a 3 mm wide slot
Probe shield	Reduces the X-ray backscatter in the direction of the user during a test
USB cable (USB A to USB mini B)	Provides a connection to a PC

Appendix B: Vanta Work Station

The Vanta Work Station provides a fully shielded, rugged test stand for bench top field testing.

B.1 Package Content

A complete Vanta Work Station consists of the following:

- Legs
- Work Station chamber

NOTE

When it is coupled to the Vanta Work Station, the Vanta open beam handheld XRF analyzer operates at the same safety level of a closed-beam X-ray system.

Table 14 Vanta Work Station

	Component key	Vanta Work Station
1	Lid handle	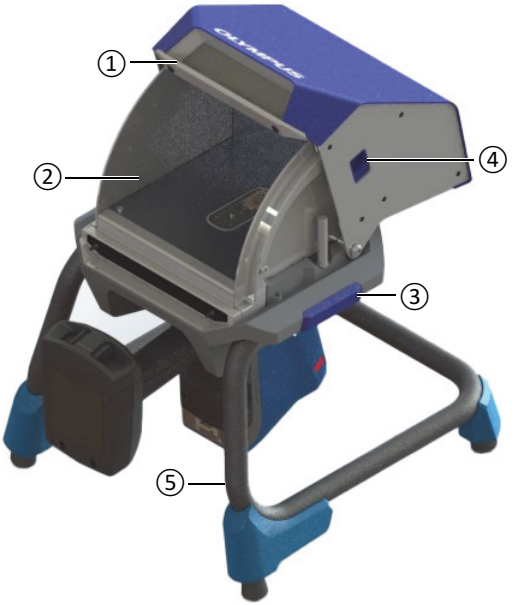
2	Chamber interior	
3	Stand locking lever	
4	Lid locking lever	
5	Stand	
Rear panel:		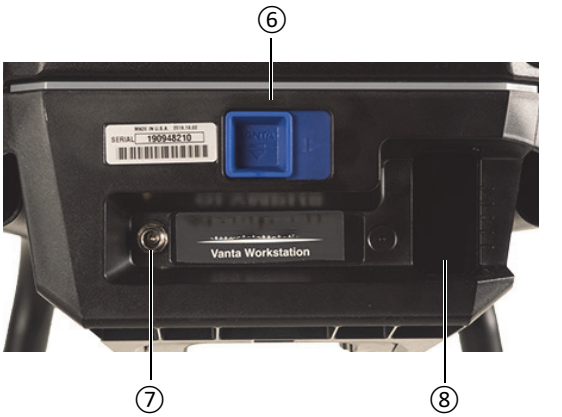
6	Analyzer release lever	
7	DC power connector	
8	Battery receptacle	

B.2 Accessories

The Vanta Work Station optional accessories are listed in Table 15 on page 105.

Table 15 Vanta Work Station accessories

	Component key	Accessory
	AC power adaptor (18 VDC, 3.9 A) [U8020997] (This power adaptor is a standard item with the Vanta analyzer.)	
	Carry Case (Q0203583)	

B.3 Safety Information

The safety features of the Work Station are described in this section.

B.3.1 Radiation Safety

The Vanta Work Station is a secure and dependable system when used in accordance with recommended testing techniques and safety procedures. The radiation detected in the area outside the closed Work Station is below the prescribed limit for unrestricted areas.

Vanta Max and Core series instruments, when properly installed in the Vanta Work Station, have leakage radiation below 1.0 μSv/hr (0.1 mR/hr) on contact from the Vanta analyzer and the Work Station. Thus, the leakage radiation levels are below some localized standards that are set at 1.0 μSv/hr (0.1 mR/hr) at 10 cm (100 mm).

WARNING

- Vanta analyzers must only be used by trained and authorized operators in accordance with proper safety procedures. Improper use may impair safety protection and cause potential harm to the user.
- Read all warning signs and labels.
- DO NOT USE the Vanta Work Station if it exhibits any sign of damage, as doing so could result in unintentional emission of stray radiation. If any damage is found or suspected, have a qualified professional perform a radiation safety test and repair the Work Station.

B.3.2 AC Power Adaptors

Two AC power adaptors are included with the instrument and the Work Station. Use only one of the AC power adaptors (18 VDC) to power the Vanta Work Station or charge the Vanta analyzer. Using both AC power adaptors at the same time can cause electrical malfunction. Powering the Vanta analyzer via the Work Station is preferred.

CAUTION

Using incompatible equipment could cause malfunction and/or equipment damage.

B.3.3 Safety Interlocks

Safety interlocks ensure that the Vanta Work Station can be operated at the same safety level as a closed-beam X-ray system. The chamber lid must be closed before a test analysis can be initiated.

Examples of the safety interlock functionality:

- If the lid is open (not fully closed), the safety interlocks engage, the Vanta Start Test button is disabled (grayed out). It is then impossible to force the X-ray On condition.
- If the lid is opened during an active test, the safety interlocks engage, and the Vanta X-ray tube turns off immediately. A "**Test Aborted**" message is displayed on the PC or wireless device.

NOTE

The Work Station must be powered for the salety interlocks to be functional.

B.3.4 X-Ray Indicator

The X-ray indicator is located along the base (front and rear) of the Work Station. The indicator flashes amber to signify that the analyzer is emitting X-ray radiation through the measurement window (see Figure B-4 on page 111).

NOTE

When power is applied to the Work Station, the indicators flash once.

Figure B-1 Vanta X-ray indicator

B.3.5 Shutdown Under Emergency Conditions

If you believe that the Vanta analyzer is locked in the X-ray On condition, and the X-ray indicator continues to blink, perform the following procedure.

To shut down the Vanta analyzer in case of emergency

◆ Press the **Stop Test** button on the PC or mobile device screen.

NOTE

Opening the lid will not compromise the integrity of the test data.

B.4 Physical Planning

Because of the size and unique requirements of the Vanta Work Station, you should plan accordingly when selecting a physical location. The Vanta Work Station with a battery installed weighs 9.9 kg (21.8 lb) when loaded with a Vanta analyzer and battery.

B.4.1 Physical Dimensions

To ensure a minimum footprint for the Work Station, add at least 5.1 cm (2 in.) to the actual 32.6 cm (12.8 in.) width and 34.6 cm (13.6 in.) depth (see Figure B-2 on page 109).

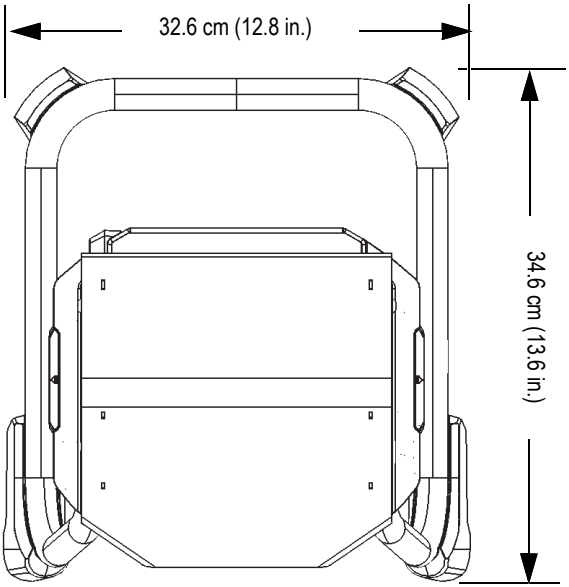

Figure B-2 Work Station top view

Plan for a 42.1 cm (16.6 in.) height when the lid is fully open (see Figure B-4 on page 111). You should be able to comfortably access the Work Station lid latch and chamber.

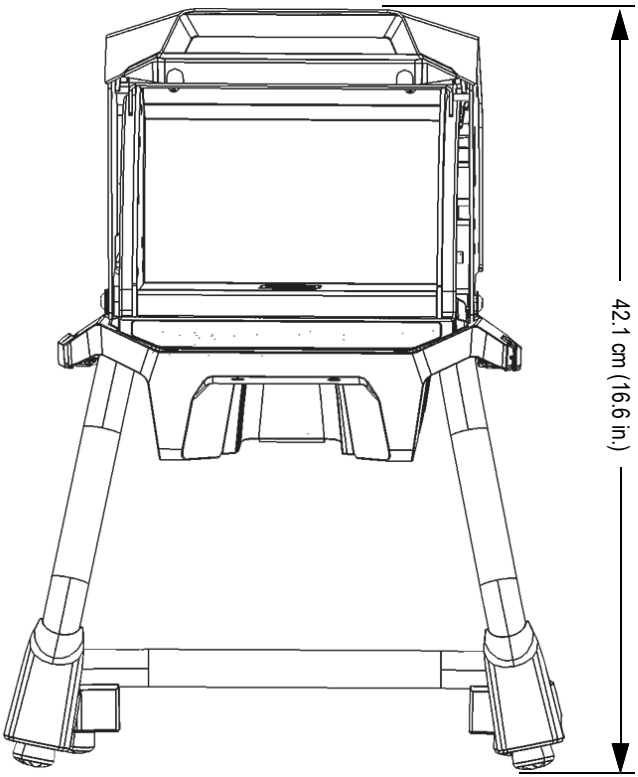

Figure B-3 Work Station — Front view (top open)

B.4.2 Work Station Chamber Dimensions

Inside dimensions of the Work Station chamber appear in Figure B-4 on page 111 and Figure B-5 on page 111.

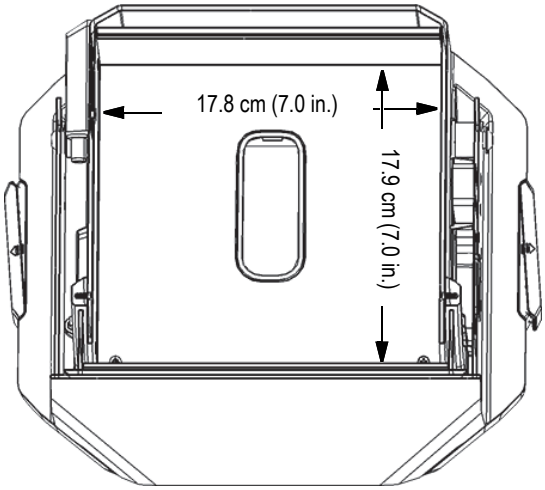

Figure B-4 Work Station chamber —Top cutaway view

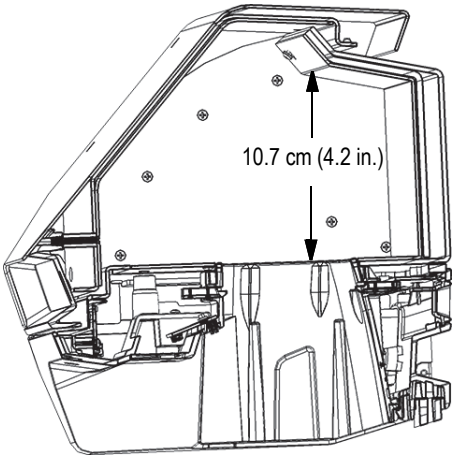

Figure B-5 Work Station chamber — Side cutaway view

B.4.3 Electrical Requirements

The Vanta Work Station can be powered with a Vanta AC power adaptor or a Vanta analyzer battery. The AC power adaptor is supplied with both the Vanta portable X-ray fluorescence analyzer and as an option to the Vanta Work Station.

NOTE

When a battery is installed in the Work Station and no battery is installed in the handle of the Vanta XRF analyzer, a five second delay occurs before the analyzer turns on when you apply power.

NOTE

A Vanta analyzer with a battery installed in the handle will *not* power the Vanta Work Station.

NOTE

When the Vanta Work Station is connected to AC power, both the battery in the Vanta handle and the battery in the Work Station will charge.

B.5 Assembling the Work Station

Assembling the Vanta Work Station includes setting up the Work Station and installing the Vanta analyzer.

To set up the Work Station

1. Set the Work Station legs and chamber beside each other on a table or bench (see Figure B-6 on page 113).

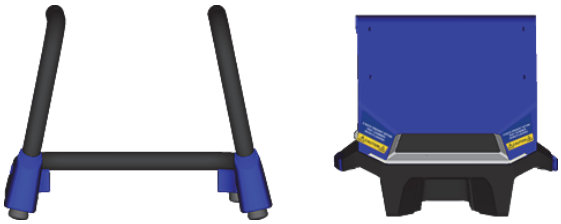

Figure B-6 Work Station legs and chamber

2. Lift the Work Station chamber and position it over the legs (see Figure B-7 on page 113).
3. Lower the chamber onto the legs.

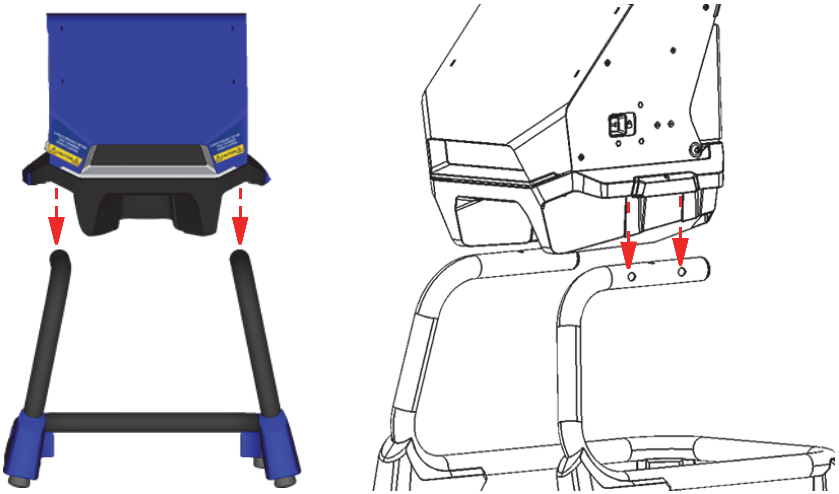

Figure B-7 Work Station chamber positioned over legs

4. Slide the Work Station chamber back and forth to align the holes in the legs with the pins on the chamber (see Figure B-8 on page 114) until the pins lock into the legs with an audible click.

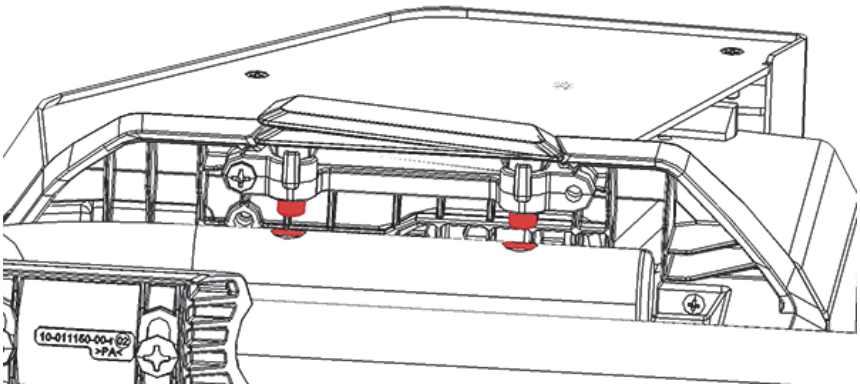

Figure B-8 Work Station chamber view from bottom

5. If necessary, use the leveling feet to stabilize the Work Station (see Figure B-9 on page 114).

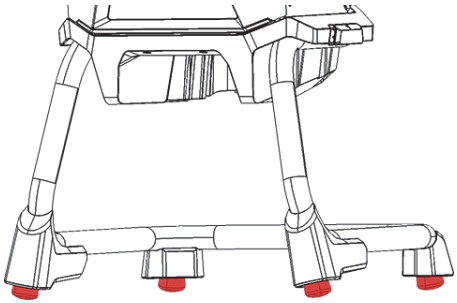

Figure B-9 Work Station leveling feet

To unlock and open the lid

1. Slide the lid locking lever to the right to unlock the lid (see Figure B-10 on page 115).
2. Grasp the lid by the handle and open completely.

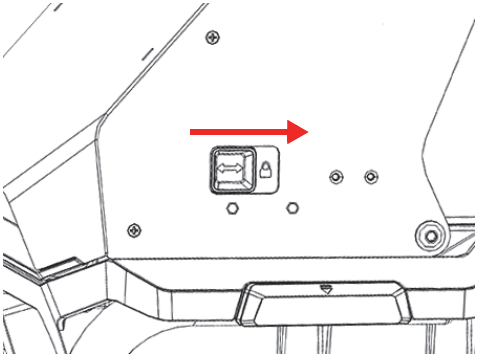

Figure B-10 Lid locking lever in locked position

To connect battery power

- Insert a Vanta battery into the battery receptacle on the rear of the Work Station (see Figure B-8 on page 114).

Figure B-11 Battery insertion

To connect DC power

- Connect the DC power plug from the AC power adaptor to the DC power connector on the rear of the Work Station (see Figure B-8 on page 114).

Figure B-12 Connect DC power

To install the Vanta analyzer

CAUTION

Ensure that the Vanta analyzer is turned off before installing it into the Work Station. Failure to turn off the analyzer could result in unintentional operation during assembly.

1. Hold the Vanta analyzer by the handle, and insert it into the Work Station from the front, firmly pushing it up and in as shown in the sequence in Figure B-13 on page 117 (①, ②, and ③).

   You can hear an audible “click” when the Vanta analyzer locks into the Work Station.

①

②

③

Figure B-13 Sequence — Inserting the Vanta analyzer into the Work Station

2. Check to ensure that the Vanta probe faceplate is level with the Work Station chamber floor (see Figure B-14 on page 118).

   The Vanta analyzer probe has two notches (front and rear) that latch it into the Vanta Work Station locking mechanism. If the Vanta probe faceplate is level with the Work Station chamber floor, then both of the analyzer notches are locked into place.

CAUTION

The Vanta analyzer must be properly locked into place in the Work Station chamber; otherwise, it could drop from the Work Station and cause injury to personnel or damage to samples.

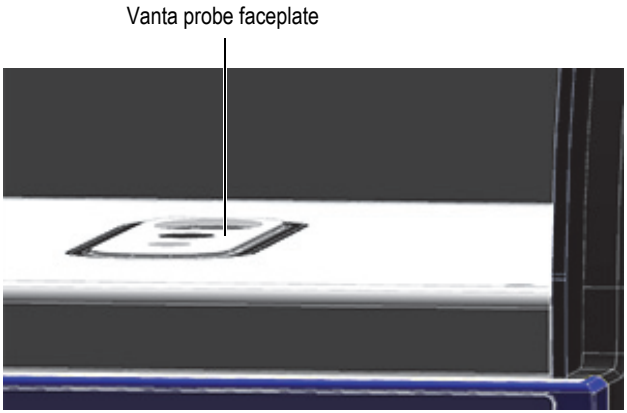

Figure B-14 Vanta probe faceplate level with Work Station chamber floor

CAUTION

The Work Station lid is heavy. If released before fully closed, the lid could cause injury to personnel or damage to samples. Be careful when loading samples into the Work Station and closing the lid.

B.6 Connecting a Computer or Mobile Device to the Vanta

Before running tests with the Vanta analyzer when it is coupled to the Vanta Work Station, you should connect it to either a PC or mobile device for remote operation. You can connect it to a PC using the mini USB connector, or you can connect it through a Wi-Fi® to either a PC or a mobile device.

NOTE

The Vanta Work Station lid must be closed before you can start a test.

To connect a computer to the Vanta analyzer using the mini USB connector

1. Use the Vanta power button to turn on the instrument.
2. On the Vanta, open the data port cover and connect a mini USB cable to the mini USB connector.

To connect a computer or mobile device to the Vanta analyzer using the Wi-Fi®

1. Use the Vanta power button to turn on the instrument.
2. On your computer or mobile device, connect to the Wi-Fi® running on the Vanta analyzer.

B.7 Operating the Vanta Analyzer When It Is Coupled to the Work Station

When the Vanta analyzer is coupled to the Vanta Work Station, the analyzer can be controlled by the Vanta PC software (PCSW) or the Vanta mobile application.

NOTE

You can start and stop tests using the trigger on the Vanta analyzer, but you cannot access the touch screen when the analyzer is coupled to the Work Station.

To operate the Vanta analyzer when it is coupled to the Work Station

- Use the Navigator in the PC software or the Vanta mobile application to control the Vanta analyzer.

Refer to the Vanta *Family X-Ray Fluorescence Analyzer PC Software User Interface Guide* or the Vanta *Family X-Ray Fluorescence Analyzer User Interface Guide* for more information on operating the Vanta.

B.8 Disassembling the Work Station

Before disassembling the Work Station, do the following:

1. On the Vanta analyzer, disconnect the mini USB cable (if it is connected).
2. Disconnect the DC power plug from the DC power connector on the rear of the Work Station (see Figure B-8 on page 114).

CAUTION

Turn off the Vanta analyzer before removing it from the Work Station. Failure to turn off the Vanta analyzer could result in unintentional operation during removal.

To remove the Vanta analyzer from the Work Station

1. Firmly grip the Vanta analyzer by the handle.
2. Slide right the latch in the back of the Work Station to release the Vanta analyzer (see Figure B-15 on page 120).

Figure B-15 Vanta lock and unlock latch

To remove the Work Station chamber

1. Pull out the Work Station chamber release handles, and then lift the chamber up off of the legs (see Figure B-16 on page 121).

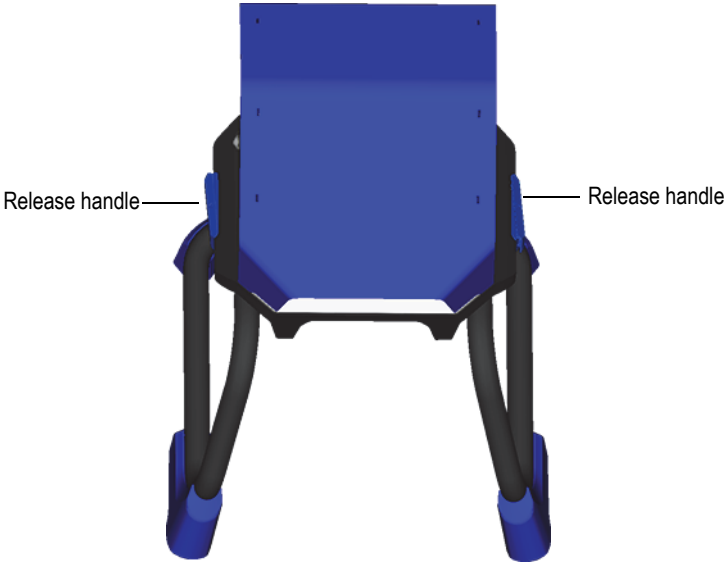

Figure B-16 Work Station chamber releases

2. Store the Work Station chamber inside the Work Station legs (see Figure B-17 on page 122) or in the optional carrying case (see Figure B-18 on page 123).

Figure B-17 Storage configuration

Figure B-18 Optional carry case

Appendix C: X-Ray Fluorescence Spectrometry Overview

XRF spectrometry determines the elemental composition of a material. This method identifies elements in a substance and quantifies the amount of those elements present. An element is defined by its characteristic X-ray emission energy (E). The amount of an element present is determined by measuring the intensity of its characteristic line.

In XRF spectrometry, primary X-ray photons are emitted from a source (X-ray tube) and strike the sample. The primary photons from the X-ray source have enough energy to knock electrons out of the innermost orbitals. An electron from an outer orbital moves into the newly vacant space at the inner orbital. As the electron from the outer orbital moves into the inner orbital space, it emits an energy known as a secondary X-ray photon.

This phenomenon is called fluorescence (see Figure C-1 on page 126). The secondary X-ray produced is characteristic of a specific element.

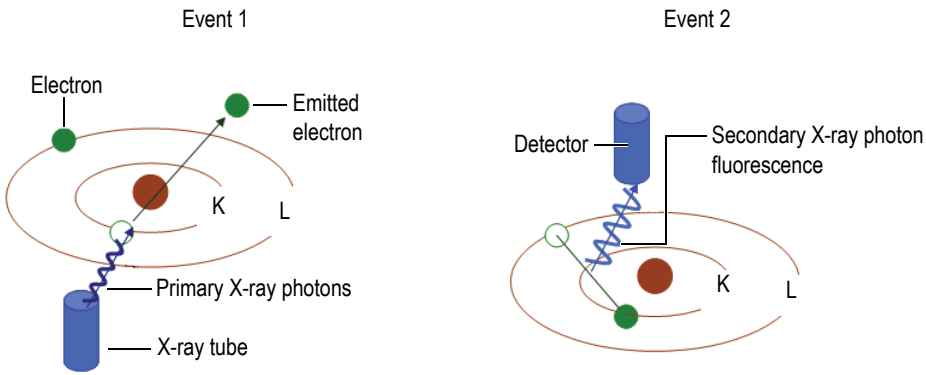

Figure C-1 Fluorescence principle

Creating a secondary X-ray: photon fluorescence

Typical spectra for energy dispersive X-ray fluorescence (EDXRF) spectrometry appear as a plot of Energy (*E*) versus the Intensity (*I*) [see Figure C-2 on page 126].

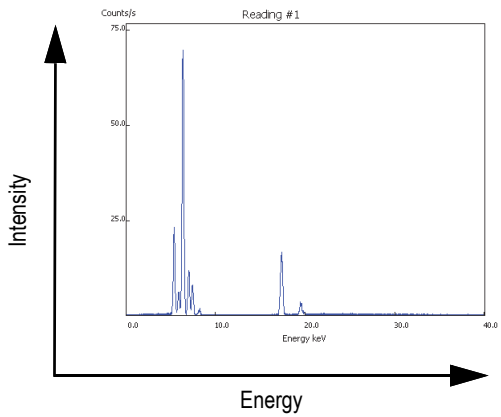

Figure C-2 Typical spectrum plot: Energy versus Intensity

Appendix D: Alloy Grade Libraries

Every Vanta XRF analyzer is supplied with four libraries:

- The Factory Grade library specific to every model
- User library #1
- User library #2
- The Residuals (tramp) settings

NOTE

Libraries are editable. However, Evident does not recommend that users edit the Factory Grade library. Instead, copy the Factory Grade library to a user library, then make your edits.

D.1 Residuals Settings

Every Vanta XRF analyzer is shipped with Residuals (tramp) settings comprised of seven base alloys (see Table 16 on page 128). The Residuals settings support other grade libraries.

Residual limits can be set, element by element, alloy base by alloy base, to meet specific requirements.

A single click can globally select or deselect the Residuals features.

How the Residuals settings work

1. Residual grades are matched to alloy bases rather than specific grades.

- Each sample is determined to be one of seven possible base alloys (see list below).
- The analyzer applies the residual grade/base-specific residual limits from the matching residual grade.

2. These residual or “alloy-base-specific” limits are applied when an element is detected in a specific grade.
   - But, the nearest grade match has no specification for that element, and;
   - The concentration of the sample is less than the max limit specified by the matching residual grade.
3. When the conditions for step 2 are met, the element reported on the Vanta screen:
   - Is labeled as a residual material in the grade comparison table
   - The grade match; however, is not penalized.

Practical advantages of the Residuals settings approach

- Faster sorting
- Fewer ambiguous or incorrect matches
- Improved grade library integrity
- Prominent labeling of residual elements

Table 16 Residuals settings base alloys

Alloy base	Common residual elements
_AlAlloyBase	Pb, Bi, Sn, Fe, Cu, and Zn.
_CoAlloyBase	Al, Ti, V, Cu, Nb, Ta, and Zr.
_CuAlloyBase	S, As, Ag, Sb, and Sn; not as common Pb, Co, and Ni.
_FeAlloyBase	V, Co, Cu, Ni, and As; sometimes Si, W, and Nb.
_GenericAlloyBase	V, Co, Cu, Ni, and As; sometimes Si, W, and Nb.
_NiAlloyBase	V, Co, W, Zr, and Nb; sometimes Ta, Mo, Cr, and Cu.
_TiAlloyBase	Fe is common; Cu and Si show up at low levels.

D.2 Factory Grade Library: Max Series and Core Series

Table 17 Cast aluminum alloys—Max and Core Series

201	203	204	206	240	242
295	296	301	302	303	308
318	319	333	336	354	355
356	357	358	359	360	361
363	364	365	369	380	381
383	384	385	390	392	393
408	409	411	423	435	443
444	511	512	513	514	515
516	518	520	535	705	707
710	711	712	713	771	850
851	852	853			

Table 18 Cobalt alloys—Max and Core Series

AlnicoVIII	Cobalt	Elgiloy	F75	FSX-414	HS-1
HS-12	HS-188	HS-19	HS-21	HS-23	HS25-L605
HS-27	HS-3	HS-30	HS-31	HS-36	HS-4
HS-6B	I-783	Jetalloy	MarM302	MarM509	MarM905
MP35N	MPN159	Refract 80	Star J	Ultimet	Vic I
Vic II	WI-52				

Table 19 Copper alloys—Max and Core and Series

Be Cu	C 110	C 122	C 151	C 155	C 186
C 190	C 194	C 195	C 197	C 210	C 220
C 226	C 230	C 240	C 260	C 270	C 274
C 280	C 310	C 314	C 330	C 332	C 340
C 342	C 353	C 360	C 377	C 405	C 411
C 413	C 422	C 425	C 443	C 464	C 482
C 485	C 505	C 510	C 511	C 519	C 521
C 524	C 534	C 544	C 623	C 630	C 638

Table 19 Copper alloys—Max and Core and Series *(continued)*

C 642	C 654	C 655	C 663	C 664	C 667
C 669	C 673	C 675	C 687	C 688	C 704
C 706	C 710	C 713	C 715	C 722	C 725
C 735	C 740	C 743	C 745	C 752	C 757
C 762	C 770	C 782	C 814	C 833	C 83450
C 836	C 838	C 842	C 844	C 848	C 852
C 854	C 857	C 861	C 862	C 863	C 864
C 865	C 867	C 868	C 875	C 8932	C 89835
C 903	C 907	C 910	C 917	C 922	C 927
C 932	C 937	C 941	C 943	C 952	C 954
C 955	C 958	C 964	C 973	C 976	C 978
C14500	C14700	C17300	C17450	C17455	C17460
C17465	C17500	C17510	C17530	C17600	C18150
C18200	NarloyZ	SeBiLOYI	SeBiLOYII	SeBiLOYIII	

Table 20 Nickel alloys—Max and Core Series

Alloy 925	C-101	CMSX-2 or 3	CMSX-4	CMSX-6	D 979
D-205	Damron	Haynes 242	Haynes 59	HW6015	M252
Monel 401	N4M2	Duraloy22H	Super22H	Nim105	Nim115
PWA 1475	Refract 26	Rene 85	Thetalloy	Udimet 720	Hast BC1
GTD222	Ni 200	Monel400	MonelK500	HastF	HastX
NichromeV	HastG	HastC22	I-602	HastG30	Nim75
I-102	HastC2000	Haynes230	RA333	HastC4	I-600
I-601	I-617	I-625	HastS	I-686	I-690
HastG2	HastG3	Waspaloy	Rene41	Nim 80A	Nim 90
Haynes214	Nim263	Udimet500	Udimet520	I-702	I-713
I-718	I-720	I-722	I-725	I-750	I-754
20Mo4	I-800	I-801	I-825	I-706	I-901
HastB	HastN	HastW	HastC276	HastB2	HastB3
MarM200	IN100	Alloy 52	I-903	I-907-909	Colmonoy 6
HastR	HR160	HyMu80	I-49	I-700	I-738
I-792	I-939	MarM002	MarM246	MarM247	MarM421

Table 20 Nickel alloys—Max and Core Series *(continued)*

Monel411	MuMetal	Nim101	PWA1480	PWA1484	Rene125
Rene142	Rene220	Rene77	Rene80	Rene95	Supertherm
Udimet700	B 1900	B-1900 Hf	C-1023	GMR235	Alloy D
Duranickel	Permanickel 300	GH99			

Table 21 Low-alloy and tool steels—Max and Core Series

1 1-4 Cr	2 1-4 Cr	5 Cr	7 Cr	9 Cr	9 Cr+V
9 Cr+VW	3310	4130	4140	4340	4820
8620	9310	12L14	86L20	Alloy 53	Carb 1-2 Moly
Carbon Steel	A-10	A-2	A-6	A-7	A-9
D-2 or D-4	D-7	H-11	H-12	H-13	H-14
H-21	M-1	M-2	M-3 Class 1+2	M-34	M-35
M-36	M-4	M-42	M-48	M-50	M-52
O-1	O-2	O-6	O-7	S-1	S-5
S-6	S-7	T-1	T-15	T-4	T-5

Table 22 High-alloy and stainless steels—Max and Core Series

201	203	301	303	304	309
310	316	317	321	329	330
347	410	416	420	422	430
431	434	439	440	441	446
2003	2101	2205	2304	2507	13-8 Mo
14-4PH	15-5 PH	15-7 Mo	15Mn-17Cr	17-4 PH	17-7 PH
19-9DL	19-9DX	20Cb3	20Mo6	CN7M	25-4-4
254SMO	26-1	29-4	29-4-2	302HQ	303Se
410 Cb	654SMO	904L	A-286	Aermet100	AL6XN
Alloy42	AlnicoII	AlnicoIII	AlnicoV	AMS350	AMS355
CD4MCU	Cronidur3	Custom450	Custom455	Custom465	E-brite
Ferallium255	GreekAscoloy	Haynes556	HC	HD	HE
HL	HN	I-840	Invar 36	Invar 39	Kovar
M152	Maraging350	MaragingC200	MaragingC250	MaragingC300	N-155

Table 22 High-alloy and stainless steels—Max and Core Series *(continued)*

Ni-hard#1	Ni-hard#4	Ni-Resist1	Ni-Resist2	Ni-Resist3	Ni-Resist4
Ni-Resist5	Ni-Span902	Nitronic32	Nitronic33	Nitronic40	Nitronic50
Nitronic60	RA85H	ZeCor	Zeron100		

Table 23 Titanium alloys—Max and Core Series

CP Ti Gr 1	CP Ti Gr 2 and 3	CP Ti Gr 4	CP Ti Gr 11	CP Ti Gr 17	Ti Pd - Gr 7
CP Ti Gr 7	CP Ti Gr 16	Ti Gr 12	CP Ti Gr 13	Ti 5-2'5	Ti 5-5-5
Ti 6-2-4-2	Timetal 62S	Timetal 62S w Pd	Ti 2'25-11-5-1	Ti 8-1-1	Ti 5-1-1-1
Ti 8	Ti 6-2-1-1	Ti 6-22-22	Ti 6-2-4-6	Ti 3-2'5	Ti 3-2'5 w Pd
Ti 3-2'5 w Ru	Ti 6-4	Ti 6-4 w Pd	Ti 6-4 w Ru	Ti 6-4 w Pd	Ti 10-3-2
Ti 4-3-1	Ti 6-6-2	Ti 6Al-7Nb	Ti 7-4	Ti 13-11-3	Ti Beta III
Ti 12-6-2	Ti 13-13	Ti 15-3-3-3	Ti 15-3-2'5	TiBetaC	Ti Beta C w Pd
Ti 5-22-44	Ti 5-5-5-3	Ti 8-8-2-3			

Table 24 CP and misc alloys—Max and Core Series

CP Ag	CP Au	CP Bi	Cp Cr	CP Hf	CP Mn
CP Mo	CP Nb	CP Pb	CP Pd	CP Ni	CP Re
CP Sb	CP Se	CP Sn	CP Ta	CP V	CP W
Cp Zn	CP Zr	AZ31	AZ91	Cb 103	60Sn-40Pb
63Sn-37Pb	96Sn-4Ag	SAC 300	SAC 305	SAC 400	SAC 405
SN 100C	90Ta 10W	70W 30 Mo	Densalloy	Hevimet	Mal 1000B
Mal 3000	Mal 3950	TungCarb C	TungCarb S	90Zn 10Al	Zr 2
Zr 4	Zr 702	Zr 704	Zr 705	B23 Babbitt	97-3
CB752	Pewter	ZAMAK 2	ZAMAK 3	ZA-8	ZA-12
ZA-27					

Table 25 Wrought aluminum alloys—Max and Core Series

1100	2001	2002	2004	2005	2007
2009	2011	2012	2014	2018	2021
2024	2025	2030	2031	2034	2036
2090	2091	2094	2095	2097	2111

Table 25 Wrought aluminum alloys—Max and Core Series *(continued)*

2117	2124	2195	2197	2214	2218
2219	2297	2519	2618	3002	3003
3004	3005	3009	3010	3011	3105
3107	3203	4004	4006	4007	4008
4009	4010	4013	4016	4018	4032
4043	4044	4046	4047	4145	4147
4343	4643	5005	5017	5042	5052
5058	5083	5086	5087	5154	5180
5210	5249	5252	5354	5451	5454
5505	5554	5556	5557	5654	5657
6002	6005	6008	6012	6013	6014
6018	6020	6040	6053	6061	6063
6066	6069	6070	6082	6111	6113
6205	6260	6262	7003	7004	7005
7009	7011	7012	7014	7016	7019
7024	7025	7026	7028	7029	7031
7032	7033	7039	7046	7049	7050
7055	7064	7068	7072	7075	7076
7090	7093	7108	7116	7136	7150
7249	7449	7475	8006	8007	8018
8019	8023	8030	8040	8050	8076
8077	8093	8130	8150	8176	

List of Figures

Figure 1-1 Power button 35
Figure 1-2 X-ray indicator (top and side) 36
Figure 1-3 X-ray indicator message on the Vanta screen 37
Figure 1-4 Status bar 38
Figure 1-5 Dosimeters — Various styles 41
Figure 2-1 AC power adaptor 51
Figure 2-2 Vanta Li-ion battery 53
Figure 2-3 USB data cable 54
Figure 3-1 Cover unlock 58
Figure 3-2 Cover open 58
Figure 3-3 Data port I/O connectors 59
Figure 3-4 AC power adaptor 60
Figure 3-5 Connecting the DC power plug 61
Figure 3-6 Inserting the microSD card 62
Figure 3-7 Inserting Wi-Fi® adaptor 63
Figure 3-8 Vanta external controls 64
Figure 3-9 Battery release buttons 66
Figure 3-10 Remove the battery 66
Figure 3-11 Hot swap screen 67
Figure 3-12 Welcome screen 69
Figure 3-13 Welcome screen 70
Figure 3-14 Unplugging the DC power plug 72
Figure 3-15 Test start and completed screens 76
Figure 4-1 Vanta window removal 91
Figure 4-2 Separating window from backing 92
Figure 4-3 New window aligned with probe 93
Figure 4-4 Handle removal 94
Figure 4-5 Fan installation 95
Figure 4-6 Handle replacement 96
Figure B-1 Vanta X-ray indicator 108

Figure B-2 Work Station top view 109
Figure B-3 Work Station — Front view (top open) 110
Figure B-4 Work Station chamber —Top cutaway view 111
Figure B-5 Work Station chamber — Side cutaway view 111
Figure B-6 Work Station legs and chamber 113
Figure B-7 Work Station chamber positioned over legs 113
Figure B-8 Work Station chamber view from bottom 114
Figure B-9 Work Station leveling feet 114
Figure B-10 Lid locking lever in locked position 115
Figure B-11 Battery insertion 115
Figure B-12 Connect DC power 116
Figure B-13 Sequence — Inserting the Vanta analyzer into the Work Station 117
Figure B-14 Vanta probe faceplate level with Work Station chamber floor 118
Figure B-15 Vanta lock and unlock latch 120
Figure B-16 Work Station chamber releases 121
Figure B-17 Storage configuration 122
Figure B-18 Optional carry case 123
Figure C-1 Fluorescence principle 126
Figure C-2 Typical spectrum plot: Energy versus Intensity 126

List of Tables

Table 1 Analyzer features 26
Table 2 Dosimeter suppliers approved internationally 43
Table 3 Dosimeter suppliers approved in Canada 43
Table 4 Vanta case contents 48
Table 5 Vanta Max and Core Series 49
Table 6 Vanta standard accessories 50
Table 7 Region specific power cord options 52
Table 8 Vanta optional accessories 54
Table 9 Proposed screening limits for RoHS elements 87
Table 10 Measurement window types 90
Table 11 Troubleshooting guide 97
Table 12 Vanta XRF analyzer specifications 99
Table 13 Accessory specifications 100
Table 14 Vanta Work Station 104
Table 15 Vanta Work Station accessories 105
Table 16 Residuals settings base alloys 128
Table 17 Cast aluminum alloys—Max and Core Series 129
Table 18 Cobalt alloys—Max and Core Series 129
Table 19 Copper alloys—Max and Core and Series 129
Table 20 Nickel alloys—Max and Core Series 130
Table 21 Low-alloy and tool steels—Max and Core Series 131
Table 22 High-alloy and stainless steels—Max and Core Series 131
Table 23 Titanium alloys—Max and Core Series 132
Table 24 CP and misc alloys—Max and Core Series 132
Table 25 Wrought aluminum alloys—Max and Core Series 132